New Castle-Rye 16127
Preliminary Design

New Hampshire DOT
Department of Transportation

New Castle-Rye Bridge
Public Advisory Committee Meeting
January 9, 2014

HDR
Hoyle, Tanner & Associates, Inc.

Meeting Agenda

- Welcome & introductions
- Today's presentation – review recommendations and progress update
  - Project Background
  - Review of Alternatives
  - Comparison of Alternatives
  - Recommendation
- Moving Forward

Project Background

- Completed Inspection and Condition Report of Bridge in 2011
- Began investigating rehabilitation/replacement alternatives in 2012
- Four alternatives introduced in July 2013
  - Alternative 1 – Rehabilitation
  - ~~Alternative 2 – Raised Profile, Replacement with Fixed Bridge~~
  - Alternative 3 – Replacement with Bascule
  - ~~Alternative 4 – Off-line Construction, Replacement with Bascule~~

Project Background

- Raised Profile and Off-Alignment Alternatives previously recommended for elimination due to unreasonable impacts to environment, surrounding areas and community
- Major Rehabilitation (Formerly “Alternative 1”) and Replacement with a bascule structure (Formerly “Alternative 3”) under on-going consideration
- Designs are heavily informed by the Public Involvement process

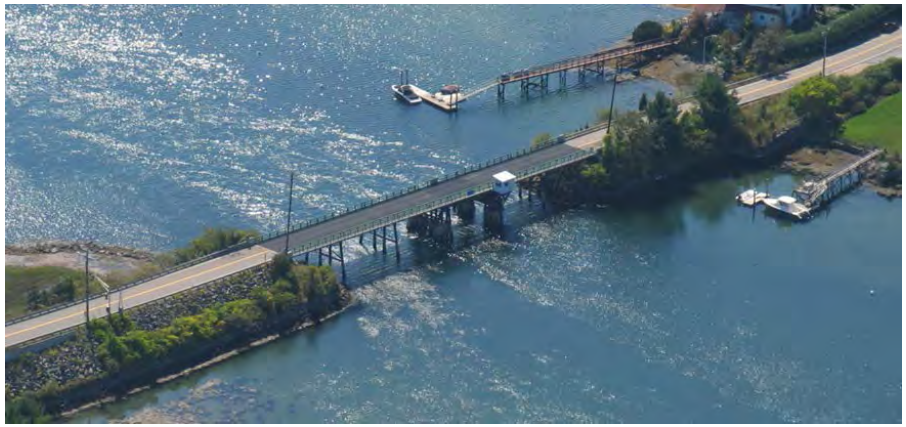

New Hampshire DOT Department of Transportation

Project Background

- PAC and Public meetings in Summer 2013
- Key focal points voiced:
  - Minimizing bridge closures is critical
  - Winter closure preferred
  - Provide a solid deck on the bridge
  - Move sidewalk to the east side of the bridge
  - Bascule preferred type of moveable span
  - Replacement Alternative overwhelmingly supported by public
- Additional concerns voiced by PAC:
  - Minimize impacts to marine environment
  - Coordinate project with Sagamore Bridge
  - Protect vegetation

Natural Resources Review

- Initial coordination with environmental agencies in spring 2013
- Consultation identified threatened and endangered species in the vicinity of the bridge
- Wetlands in northeast, southeast and northwest quadrants

New Hampshire DOT Department of Transportation

Natural Resources Review

- Finalizing Wetland Delineation Report this month
- Undertook field survey to verify location of eel grass beds
- Will be meeting with environmental resource agencies to discuss additional studies that may be required
- Based on Memorial Bridge, Nov. 1-April 1 window for in-water work likely

Cultural Resources Review

- New Castle-Rye Bridge determined eligible for the National Register
- Significant for its association with Naval Defenses in WWII
- Also significant as one of two remaining bascule bridges in the State of NH

Cultural Resources Review

- Scammel Bridge was a bascule span in Dover, NH
- In 1994, NHDOT and FHWA signed MOA with NHDHR
- Committed to maintaining New Castle-Rye and Hampton Harbor Bridges and replacing only “under exceptional circumstances” such as natural disaster

New Hampshire DOT Department of Transportation

Cultural Resources Review

- MOA inconsistent with language in 1994 letter from NHDOT Commissioner O'Leary
- Letter suggested excessive costs or impacts to environmental resources could be reasons for replacement of New Castle-Rye Bridge and Hampton Harbor Bridge

Archaeological Resources Review

- Phase 1A Archaeological Survey being finalized
- Area is largely fill
- Closest archaeological site is 1874 Bridge Abutments
- Archaeological resources would not be affected by Major Rehabilitation or Replacement on same alignment

New Hampshire DOT Department of Transportation

Bridge Background

- Constructed 1941
- Carries two lanes of traffic over a USACE-maintained federal channel
- Narrow shoulders (1') and Sidewalk (4' max)
- Rehabilitated 1975, Repairs in 1978
- Extensive Maintenance, Rehabilitation and Repair work performed since 1994:
  - Two major pier rehabs since 2000
  - Complete re-painting in 2000
  - Major repairs to machinery, electrical systems and housing
  - Frequent repairs to grid deck
  - Repairs to beams 2002, 2008, 2011
- Currently posted at a 15 Ton Weight Limit

Overview of Alternatives

- Major Rehabilitation
  - Requires intensive structural analysis of existing structure
  - Bridge must carry modern truck loads
  - If possible, bridge should be updated with wider shoulders and sidewalk, and given a solid deck surface
- Replacement with bascule
  - Other moveable structure types eliminated
  - Structure designed with sidewalk and shoulder widths meeting modern standards, and given a solid decking surface
  - Structure layout considers both aesthetics and constructability, minimizing construction duration – a key concern of the community

New Castle-Rye 16127
Preliminary Design

New Hampshire DOT
Department of Transportation

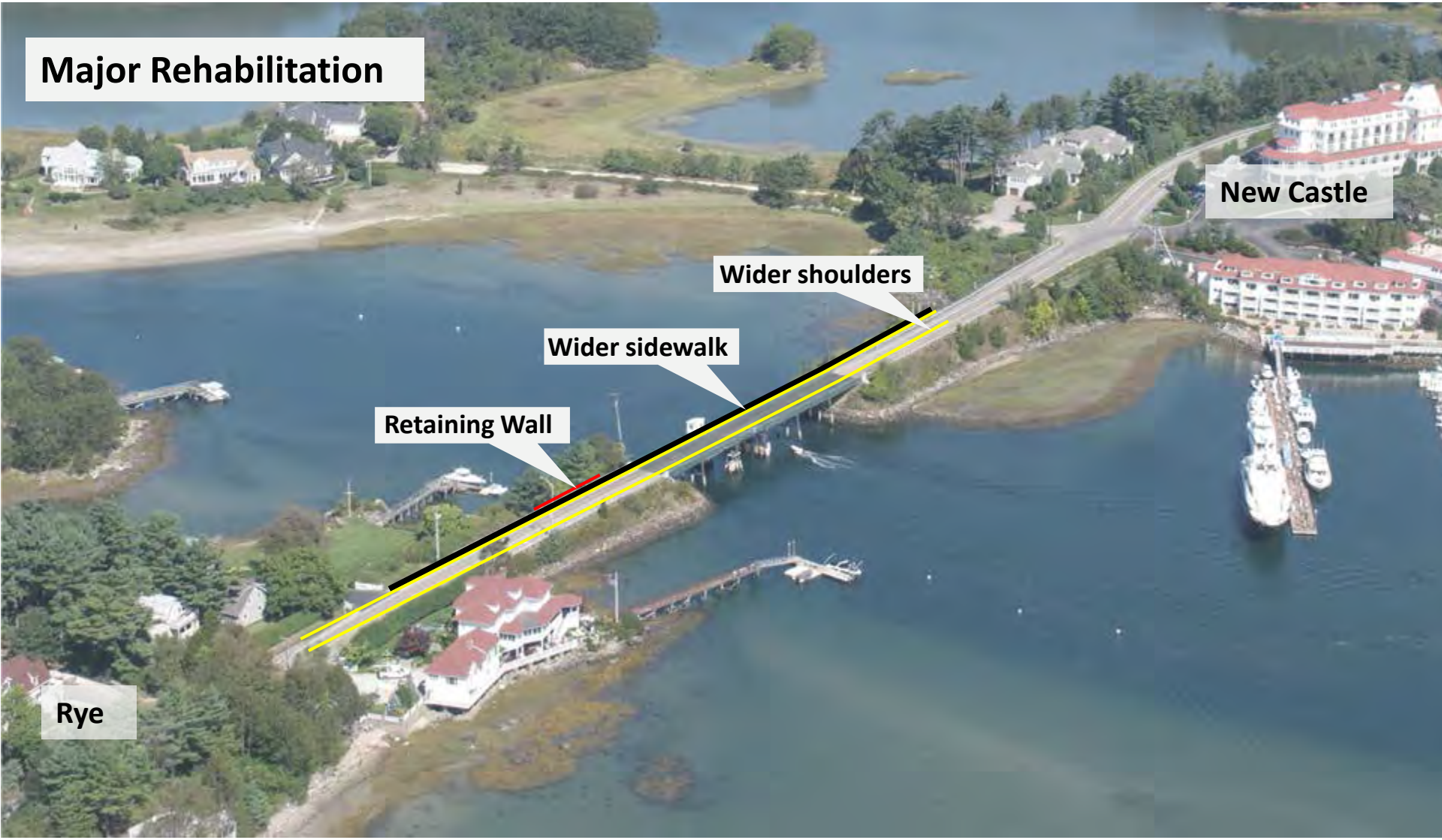

HDR Hoyle, Tanner & Associates, Inc.

New Castle-Rye 16127
Preliminary Design

New Hampshire DOT
Department of Transportation

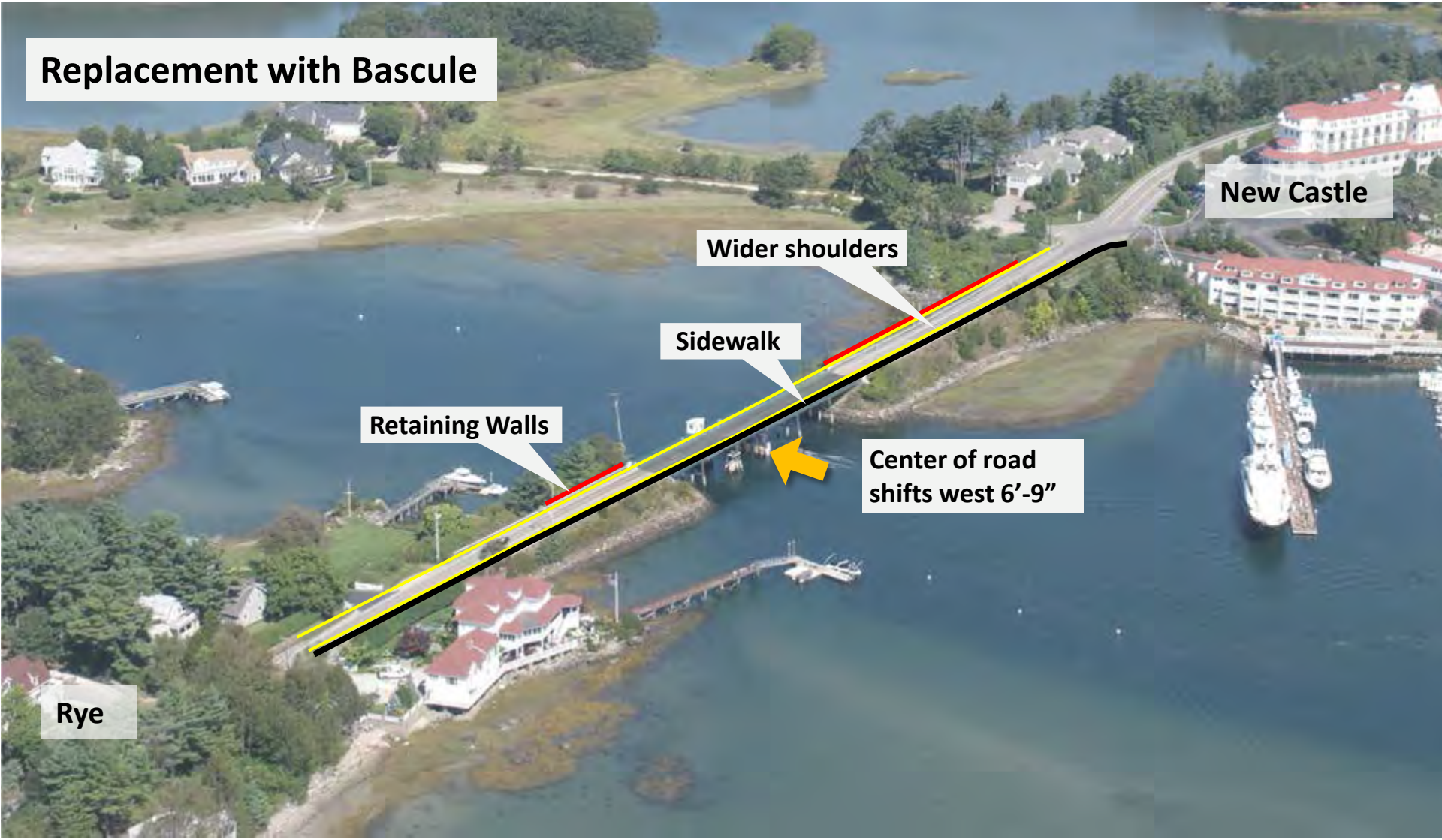

HDR Hoyle, Tanner & Associates, Inc.

Major Rehabilitation

- First step: analyze the existing structure
- Initial analysis assumed existing bridge sustaining modern statutory loads – did not include additional weight for wider roadway or closed deck
- Analysis determined that virtually all members are inadequate
  - Bridge designed for “H20” Truck – 20 tons
  - Bridge required to carry “HL93” Loading – a 36 ton truck plus 64 pounds/square foot (roughly 25 tons per span)
  - Additionally, requirements for seismic activity are much greater
  - Deterioration of bridge further reduces its capacity

New Hampshire DOT Department of Transportation

Structural Condition of the Bridge

- Paint masks current condition of bridge
- Stringers, floorbeams and bascule girders exhibit advanced section loss
- Pier caps and piles exhibit advanced section loss; Some piles are buckled
- Machinery is obsolete

New Hampshire DOT Department of Transportation

Major Rehabilitation

- Analysis determined that virtually all members are inadequate

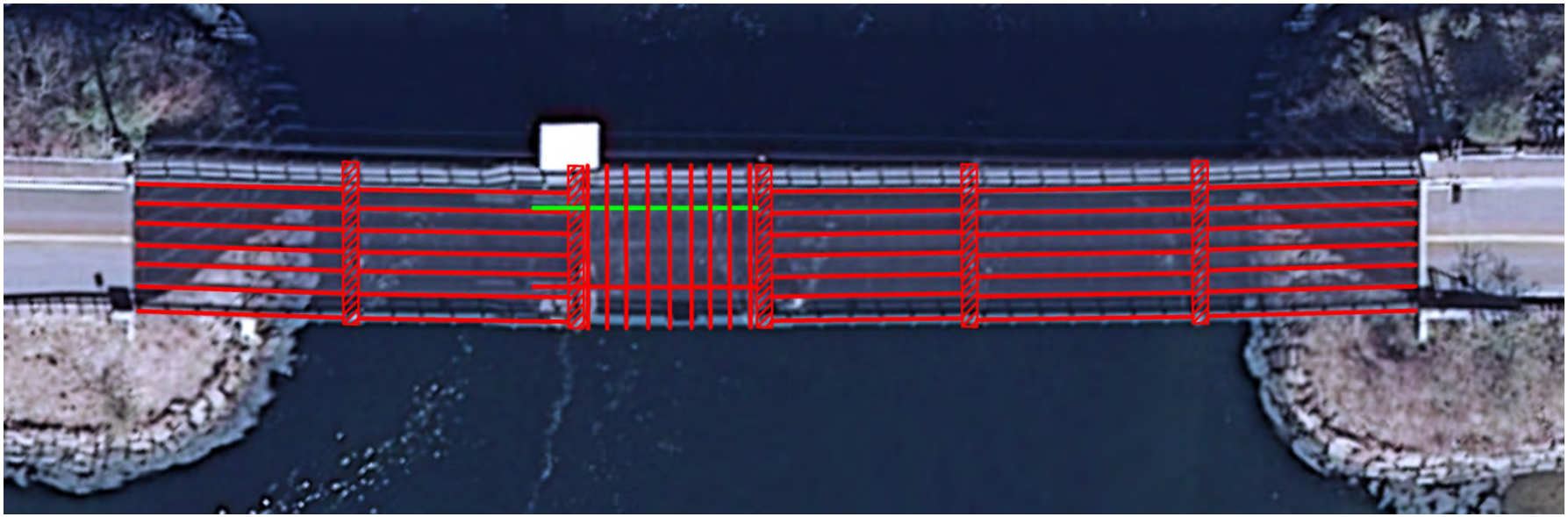

LEGEND:
MEMBER STRENGTH IS SUFFICIENT
MEMBER STRENGTH IS INSUFFICIENT

Major Rehabilitation

- Analysis determined that virtually all members are inadequate

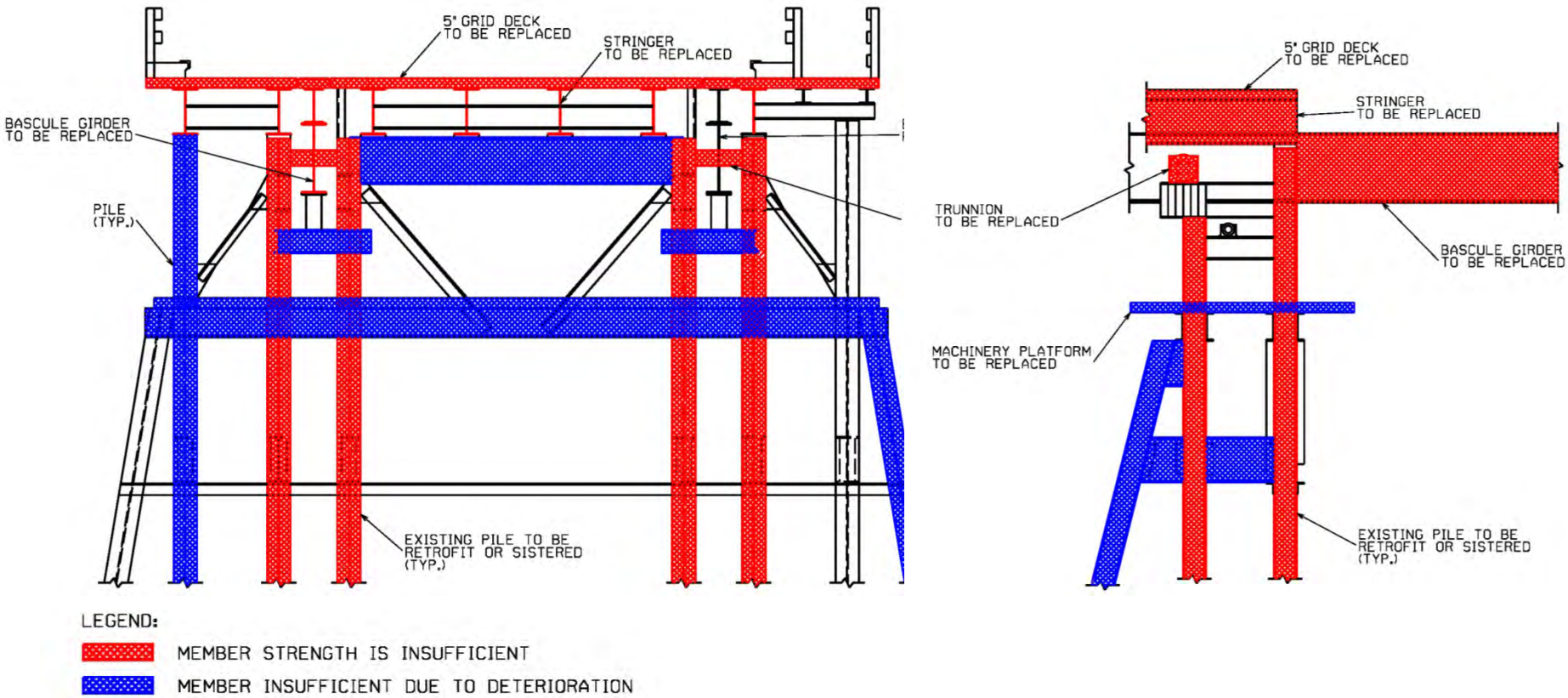

Major Rehabilitation

- Analysis determined that virtually all members are inadequate

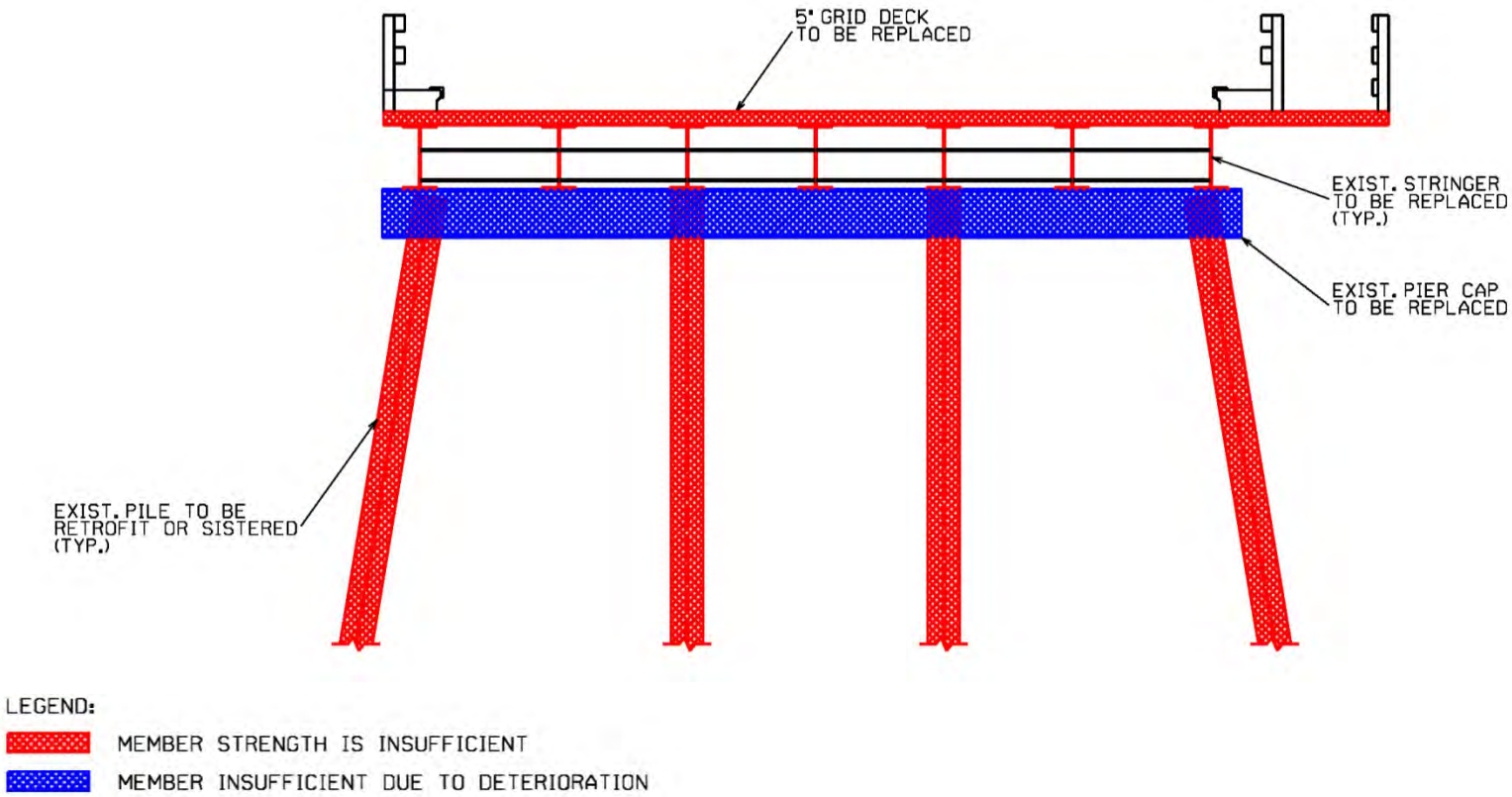

Major Rehabilitation

- Major Rehabilitation would require a complete dismantling of the structure
  - All approach stringers and caps are inadequate
  - Existing piles require retrofit or replacement
  - Machinery platform and trunnions are inadequate
  - Existing machinery requires replacement due to condition and obsolescence
  - Existing operator house is too small, and cannot fit required electrical controls
  - Major Rehabilitation is effectively construction of a replica bridge

Major Rehabilitation

- A Rehabilitated Structure:
  - Should provide roadway shoulders that are at least 2’ wide (increase of 1’)
  - Should provide a sidewalk that is at least 5’ wide (increase of 2’±)
  - Requires retaining walls on approaches due to widening
- The existing bascule span cannot support a solid deck
- Because major rehabilitation would maintain the structure’s location, the sidewalk cannot be moved to the east side

Major Rehabilitation

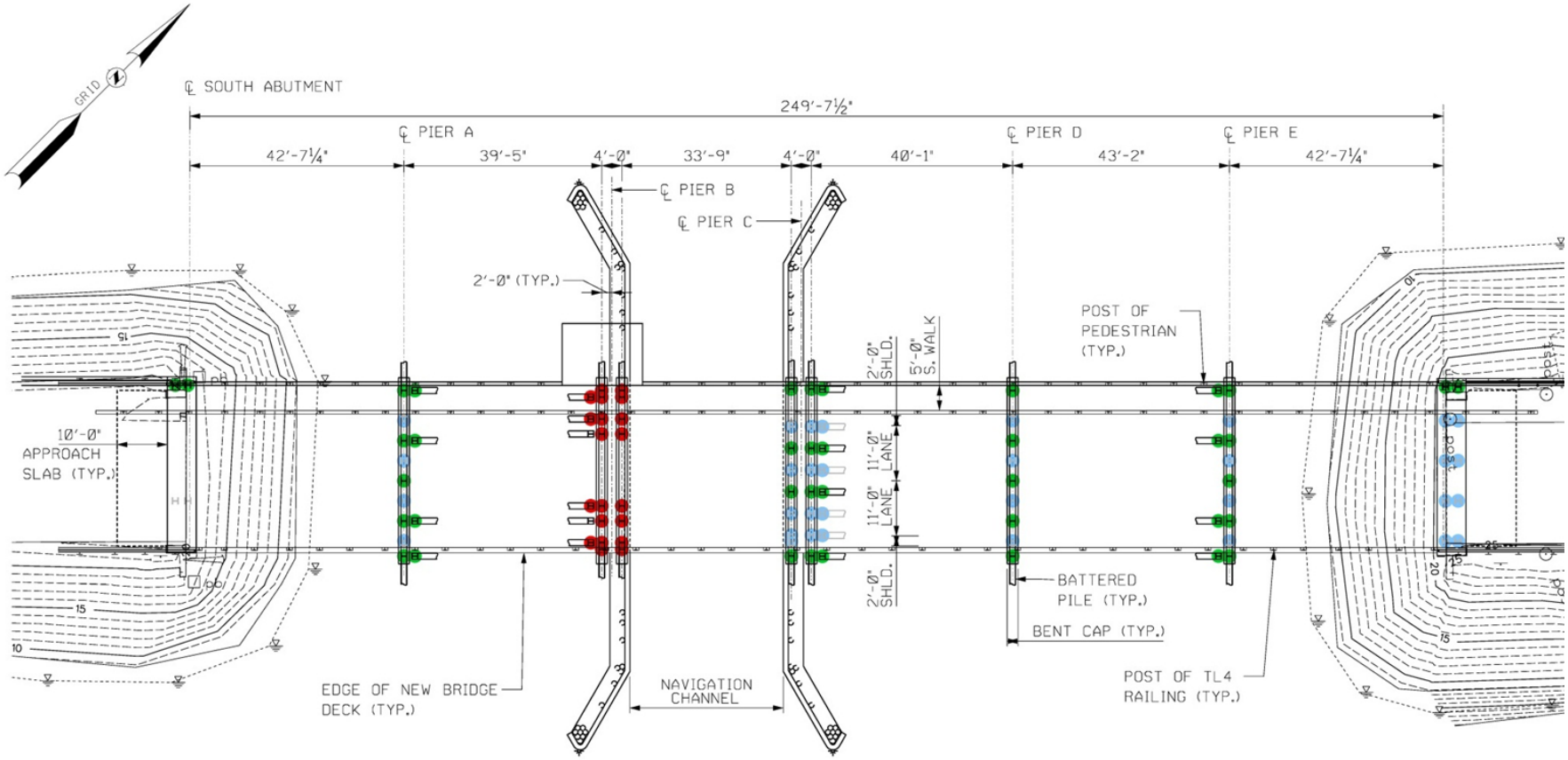

New Hampshire DOT Department of Transportation

Major Rehabilitation

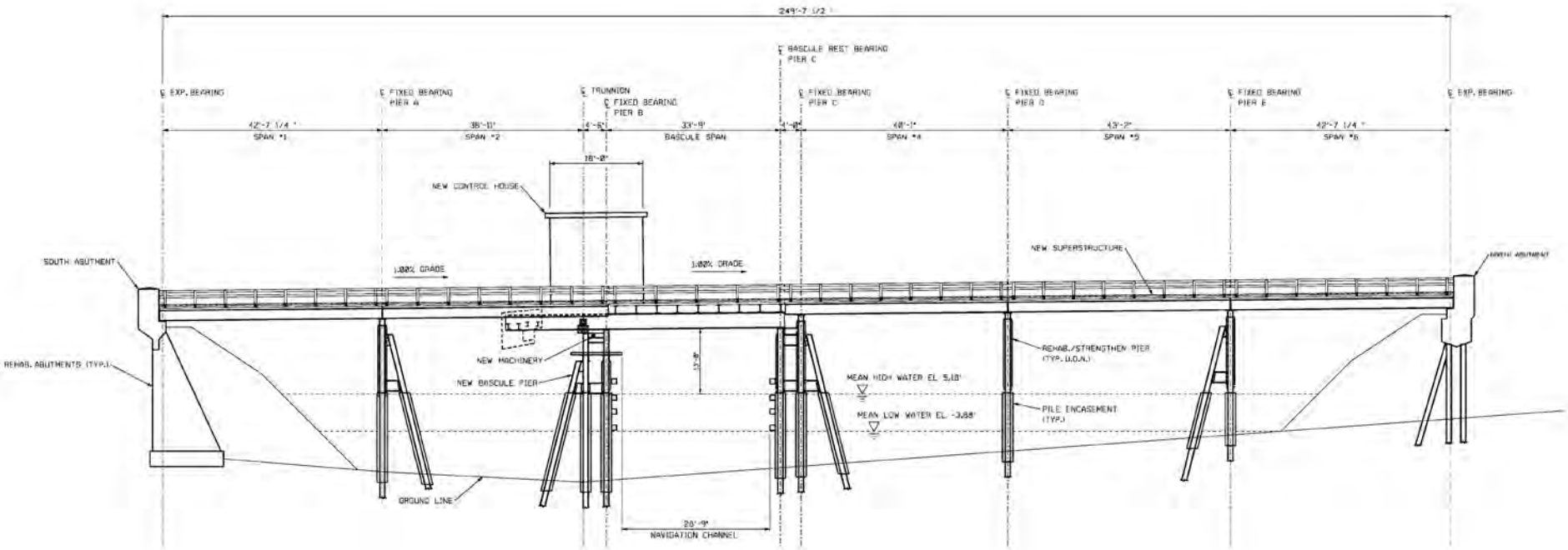

HDR Hoyle, Tanner & Associates, Inc.

Major Rehabilitation

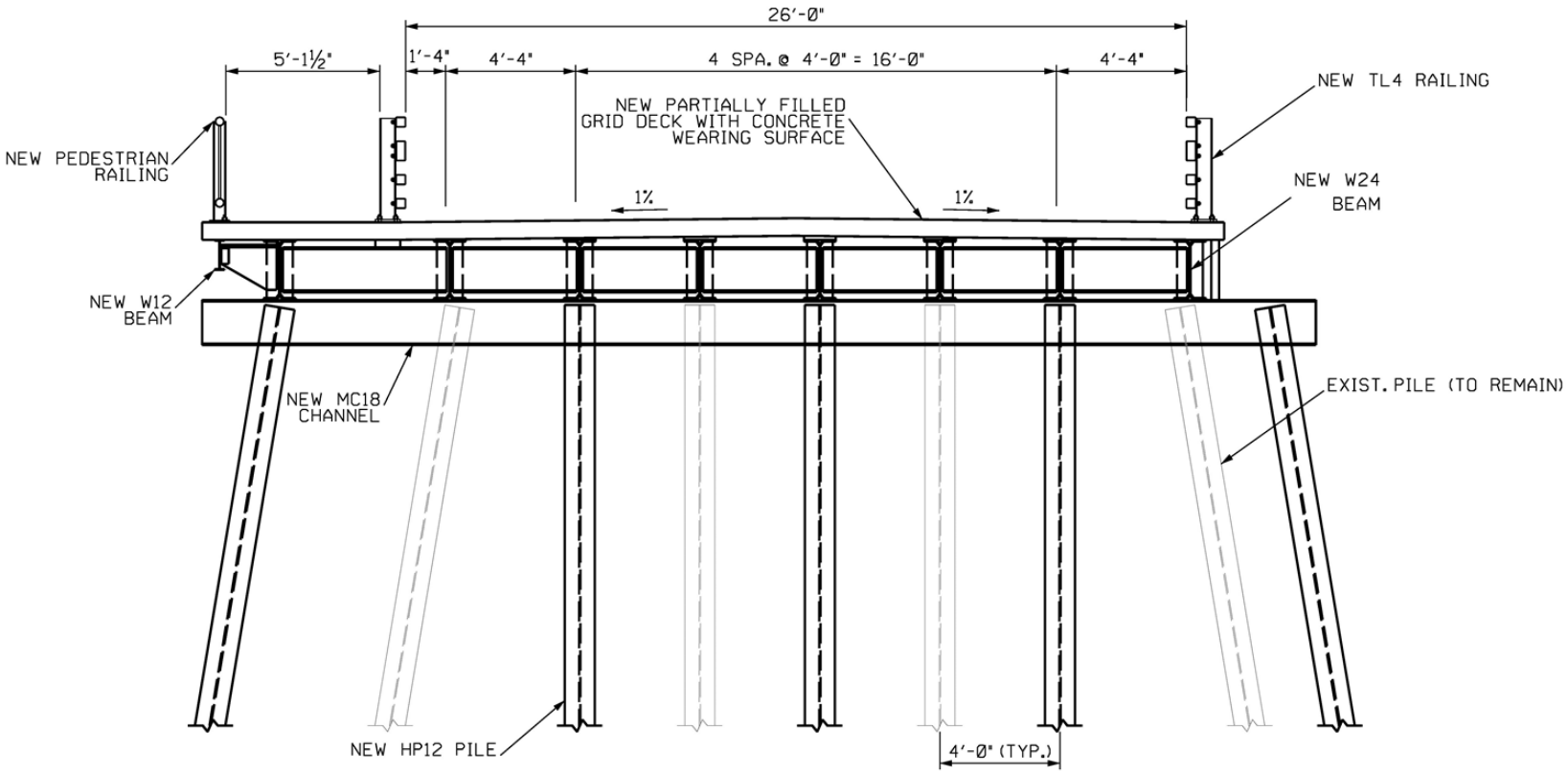

Major Rehabilitation

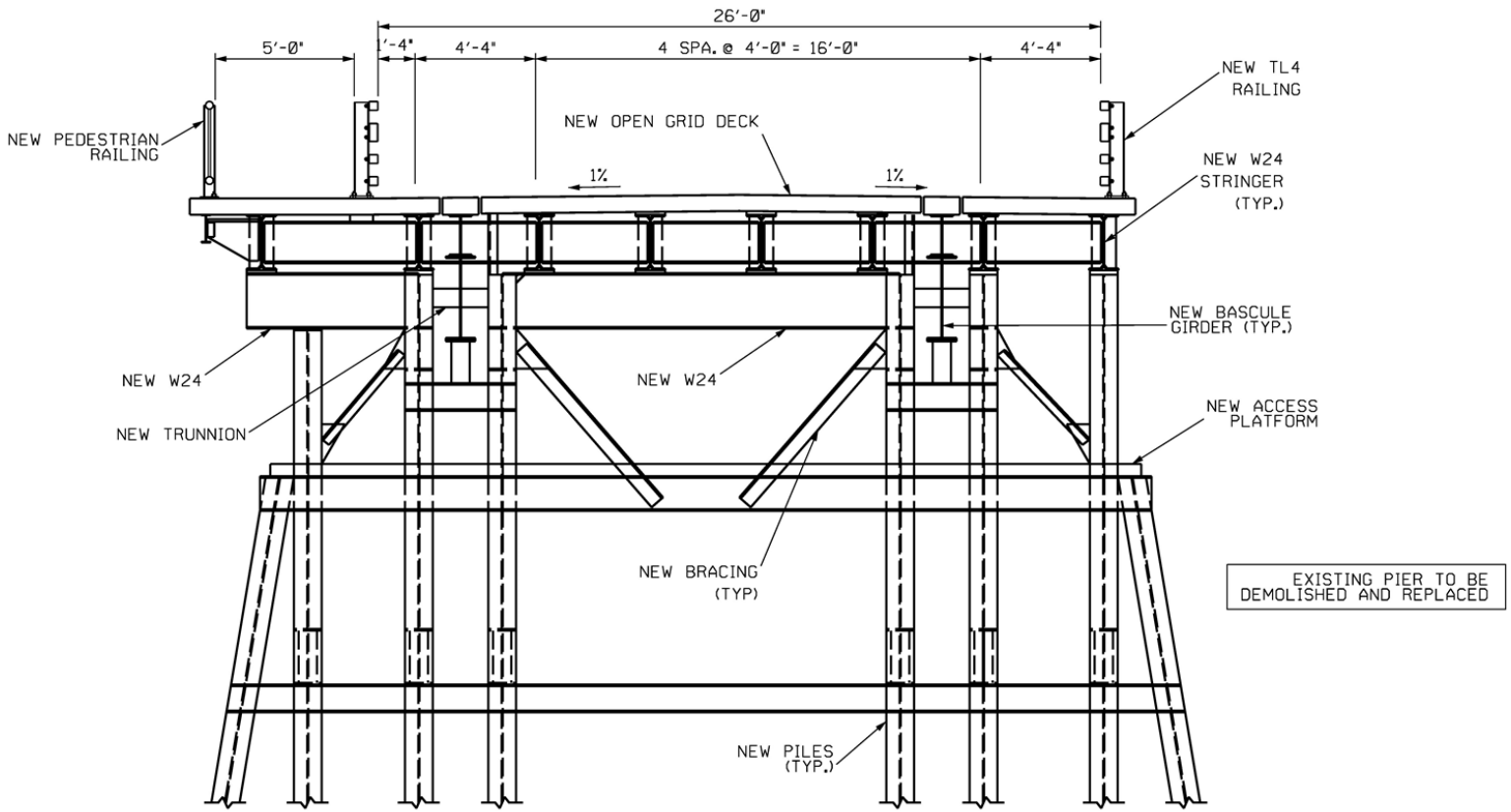

Bridge Replacement

- Replacement with bascule structure
  - Maintains 2 bascule bridges in the state of New Hampshire
  - Maintains existing navigable channel clearances
  - Maintains aesthetic of the existing bridge as much as practical
  - Preferred by the public
- Four foot wide shoulders are preferred – increased safety for vehicles and bicyclists
- Sidewalk moved to east side of roadway, thereby improving pedestrian safety
- Closed deck permitted

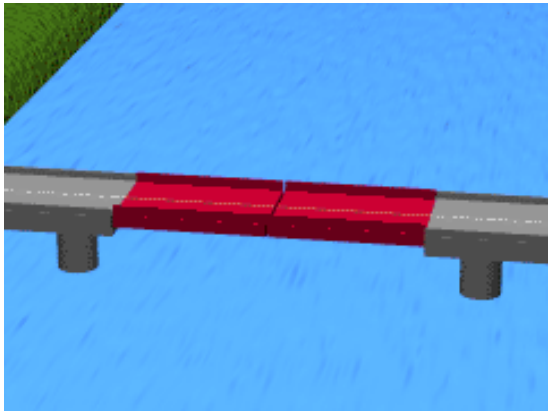

New Hampshire DOT Department of Transportation

Bridge Replacement – Design Features

- Three structure types under consideration for approach spans
  - Steel stringers
  - Precast concrete box beams
  - Precast concrete "NEXT" beams – similar in shape to Greek symbol "pi" – π
- NEXT beams recommended
  - Lowest Cost
  - Least maintenance required
- Scenic Overlook added to bridge sidewalk
- Closed bridge deck permitted
- New Operator House is a modern house influenced by the original design

Bridge Replacement

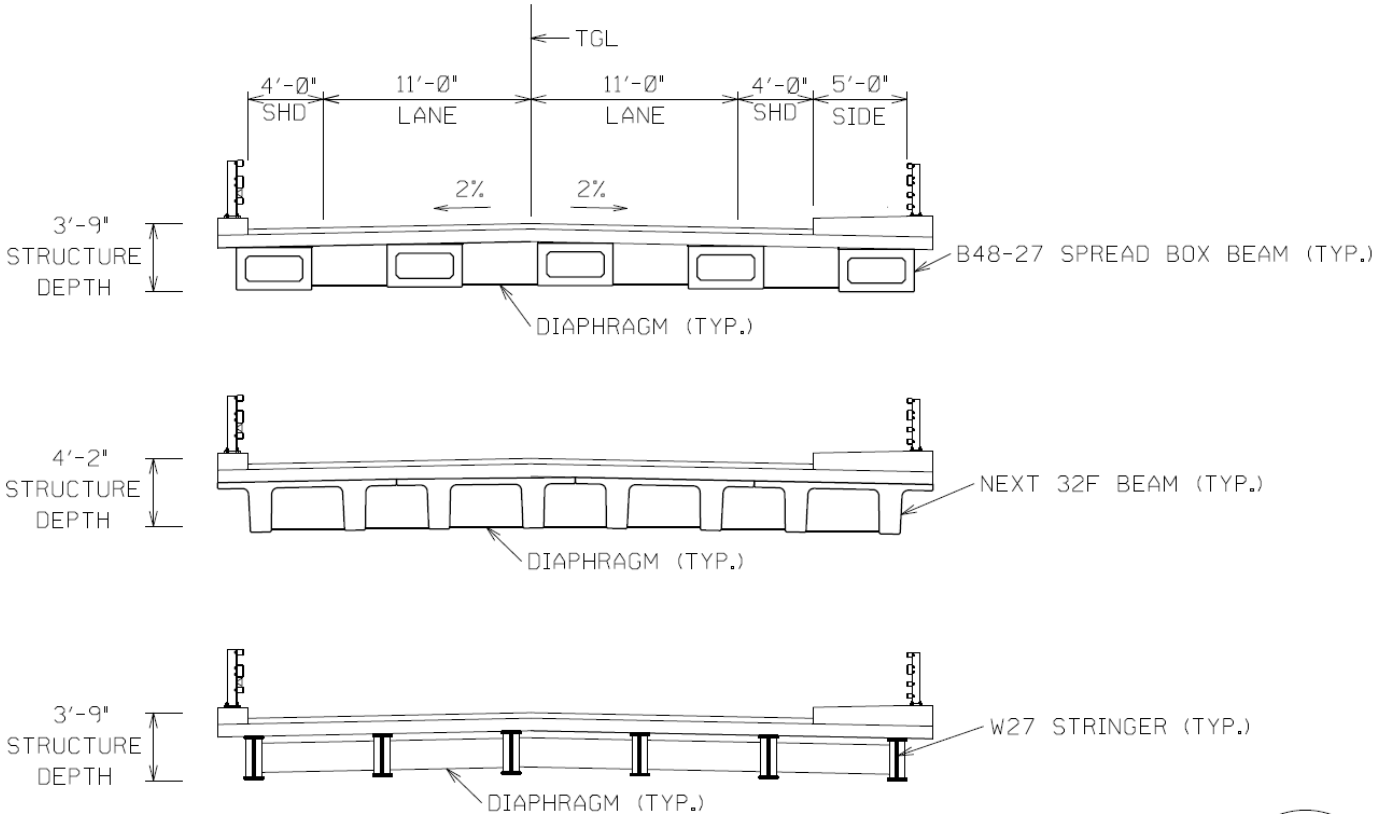

Bridge Replacement

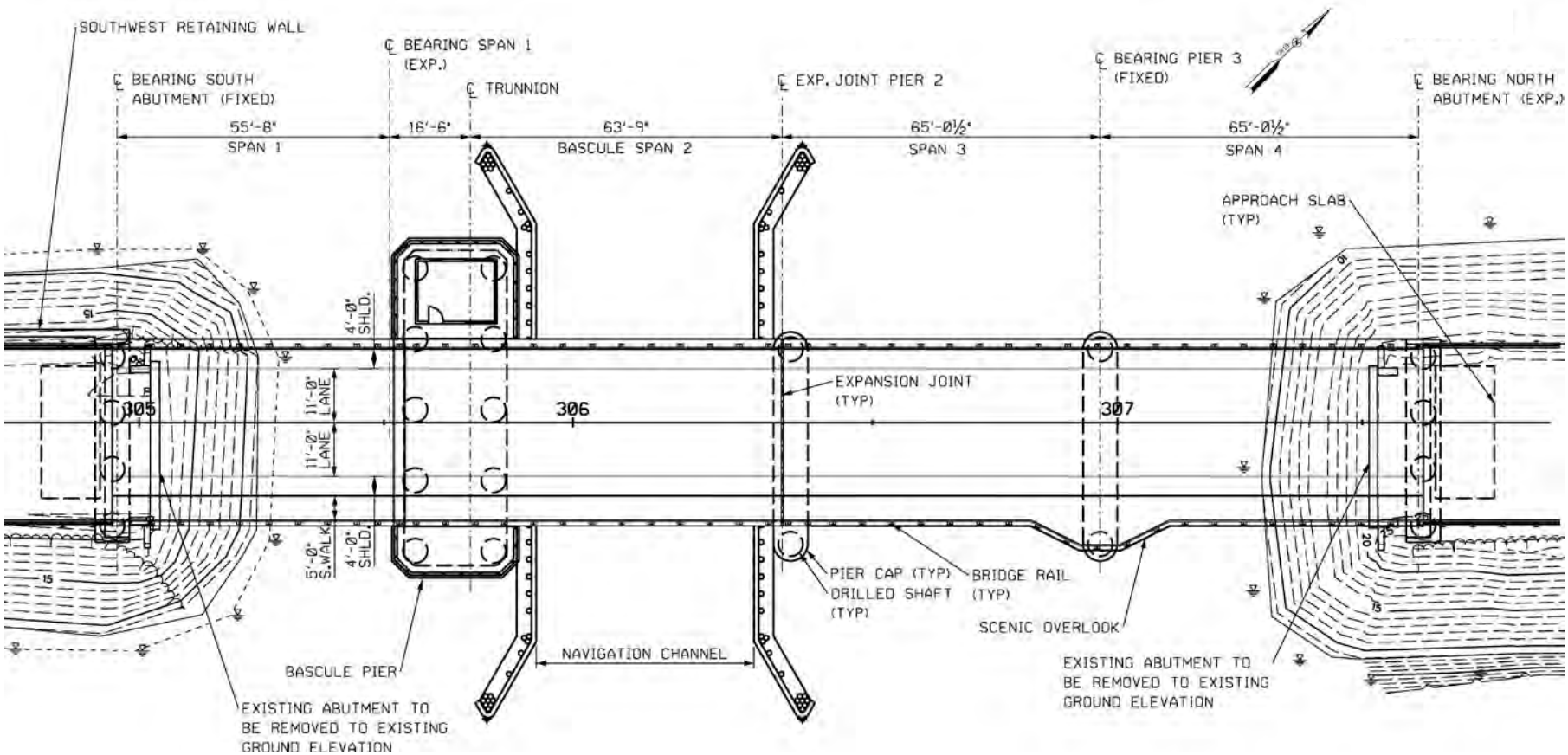

Bridge Replacement

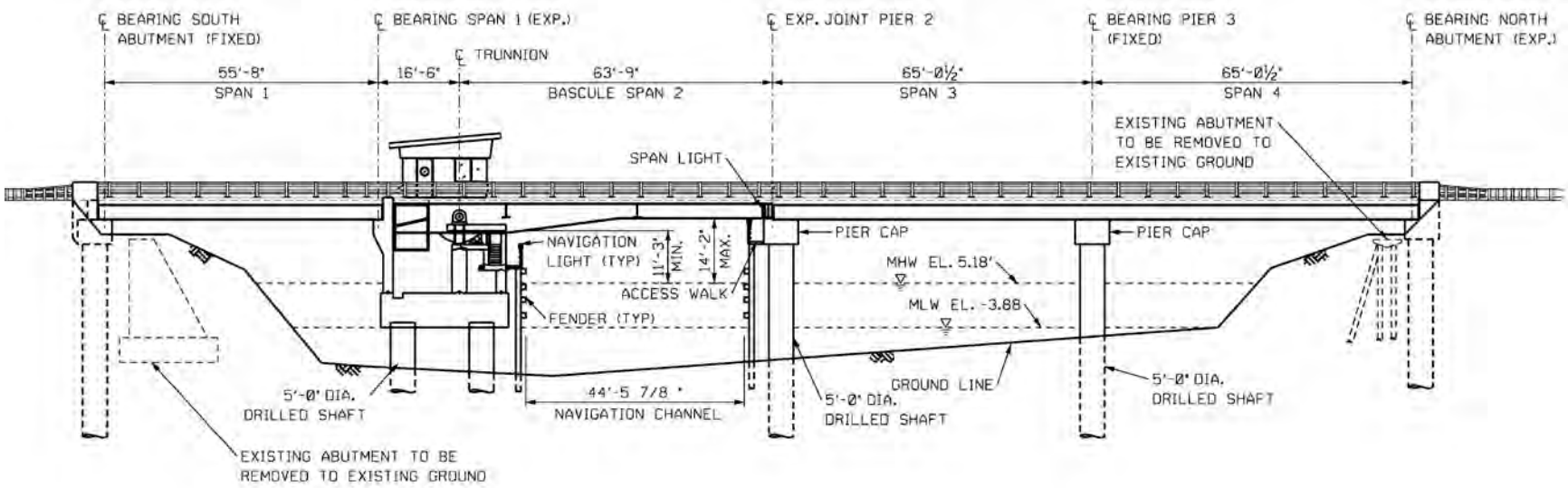

Bridge Replacement

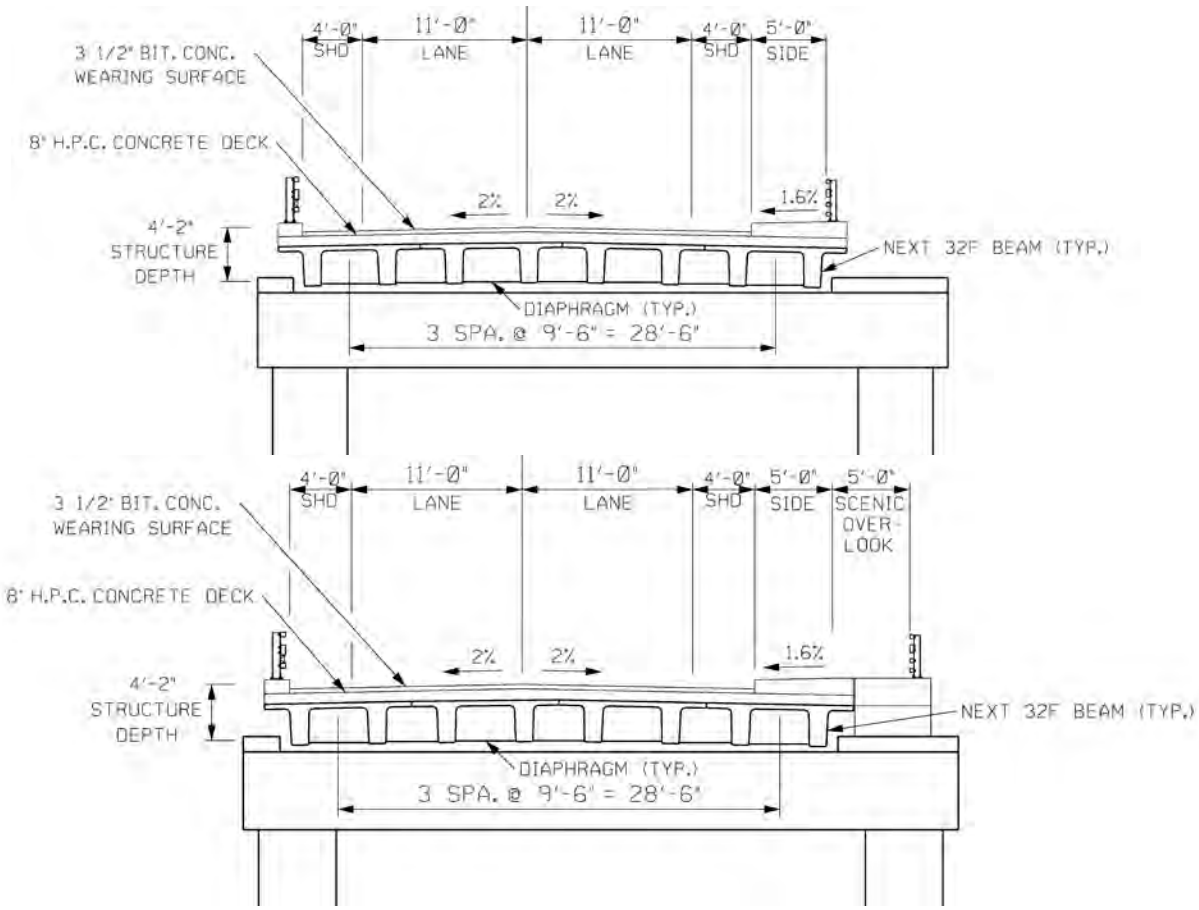

Bridge Replacement

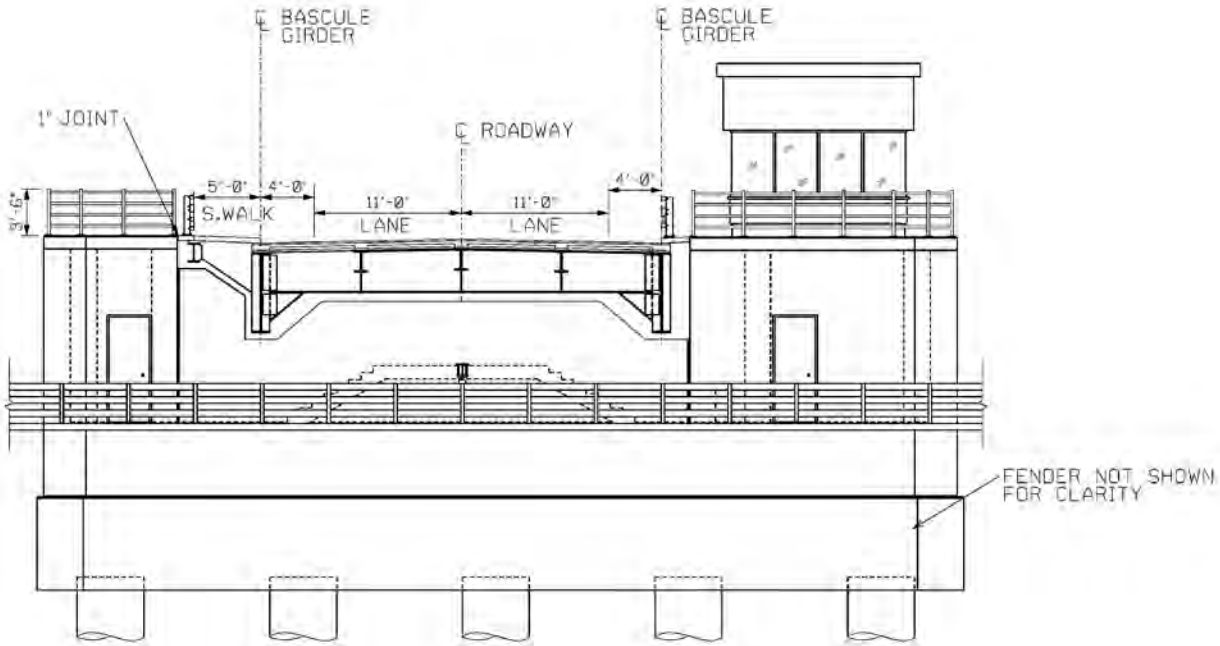

Comparison of Alternatives

- Impact considerations:
  - Both Major Rehabilitation and Replacement will be wider than the current layout, and both would impact approaches
  - Neither Alternative impacts private properties
  - Both Alternatives would require in-water work at piers
  - Both Alternatives would minimize impacts to sensitive natural resources
  - Both Alternatives require approach roadway construction in fall (1-way traffic for approx. 5 weeks)

Comparison of Alternatives

- Major Rehabilitation
  - Would require replacement of virtually all of bridge's original fabric, resulting in a "replica" bridge
  - Indirect visual effects anticipated to be negligible
  - Would require longer closure (approximately 5 months)
  - Would not resolve pedestrian and bicycle safety concerns
  - Guardrail at curb line a potential hazard to vehicles
  - Costs in the order of $15.3 million, with lifetime costs in the order of $41.6 million over 75 years (calculated assuming 2013 expenditure)
  - Shorter service life (35-40 years) before significant rehabilitation is required
  - Is not favored by public
  - Adheres to Scammell MOA as much as possible
  - This alternative would likely result in an Adverse Effect under Section 106

Comparison of Alternatives

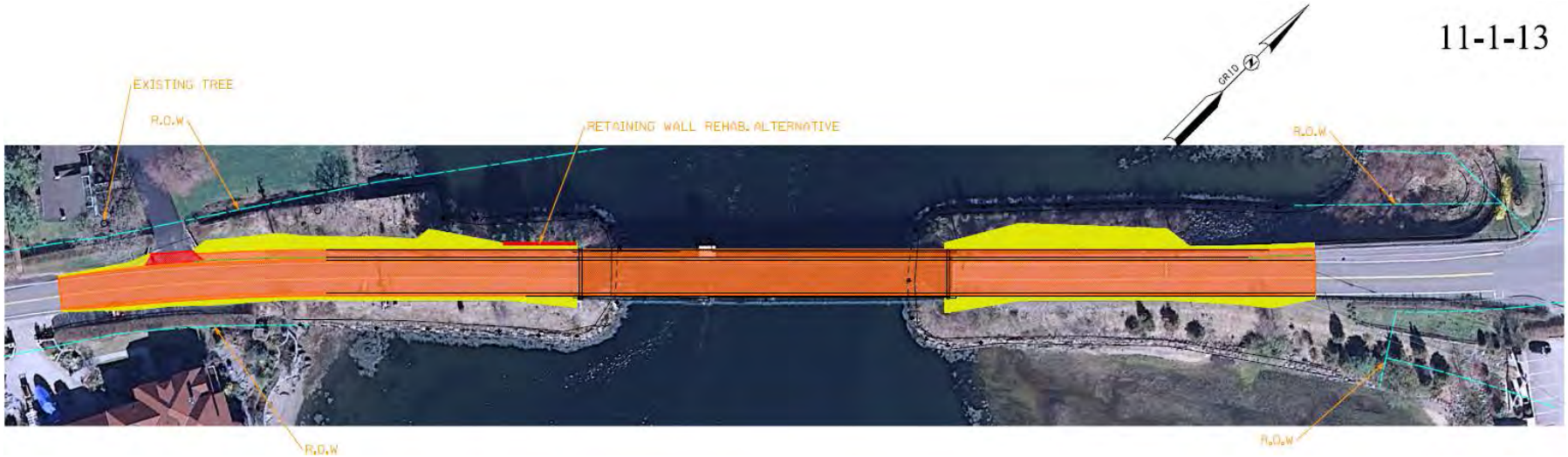

Major Rehabilitation Impacts

New Hampshire DOT Department of Transportation

Comparison of Alternatives

- Replacement
  - Would replace with bascule span – similar in profile to existing
  - Indirect visual effects anticipated to be minimal
  - Would require shorter closure (3 months)
  - Flexibility in construction season limits impacts to public
  - Would improve pedestrian and bicycle safety
  - No guardrail at curb line
  - Cost in the order of $15.8 million, with lifetime costs in the order of $24.3 million over 75 years (calculated assuming 2013 expenditure)
  - Longer service life (75 years)
  - Favored by public
  - Not in accordance with Scammell MOA
  - This Alternative would result in an Adverse Effect under Section 106

New Hampshire DOT Department of Transportation

Comparison of Alternatives

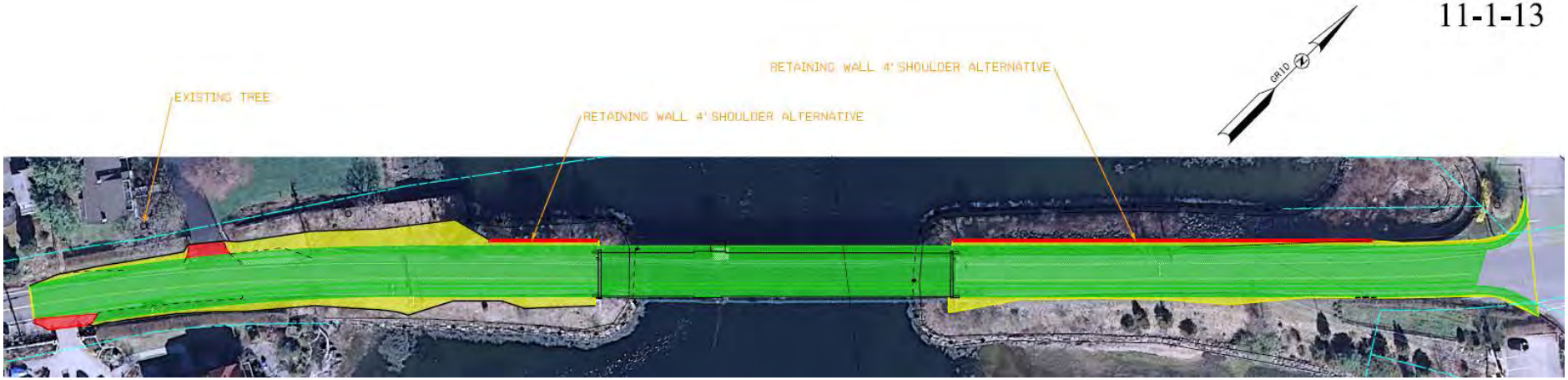

Bridge Replacement Impacts

New Hampshire DOT Department of Transportation

Comparison of Alternatives

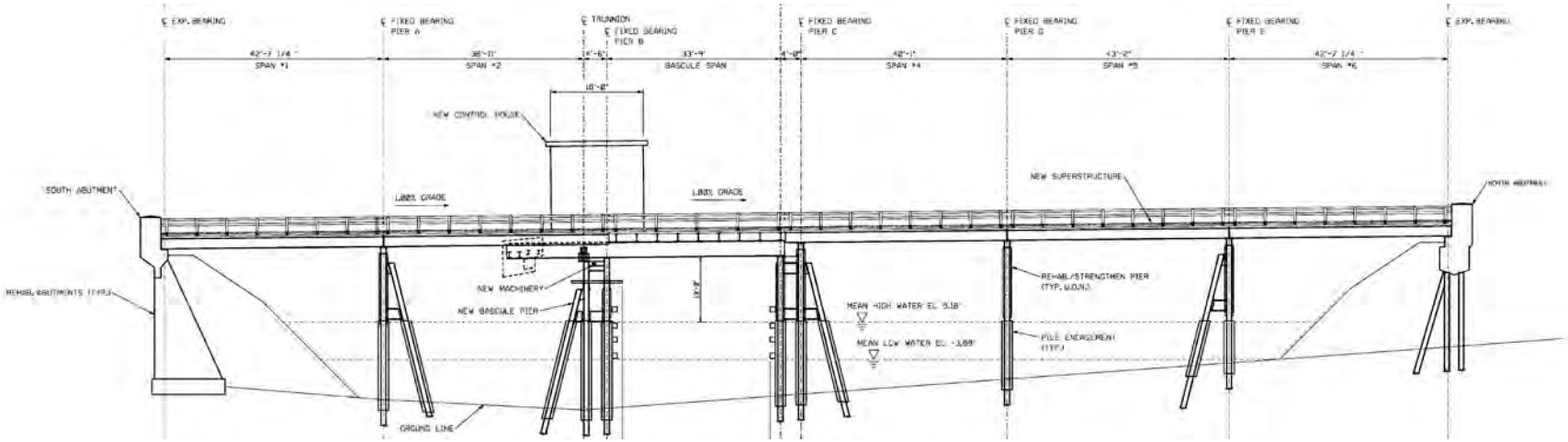

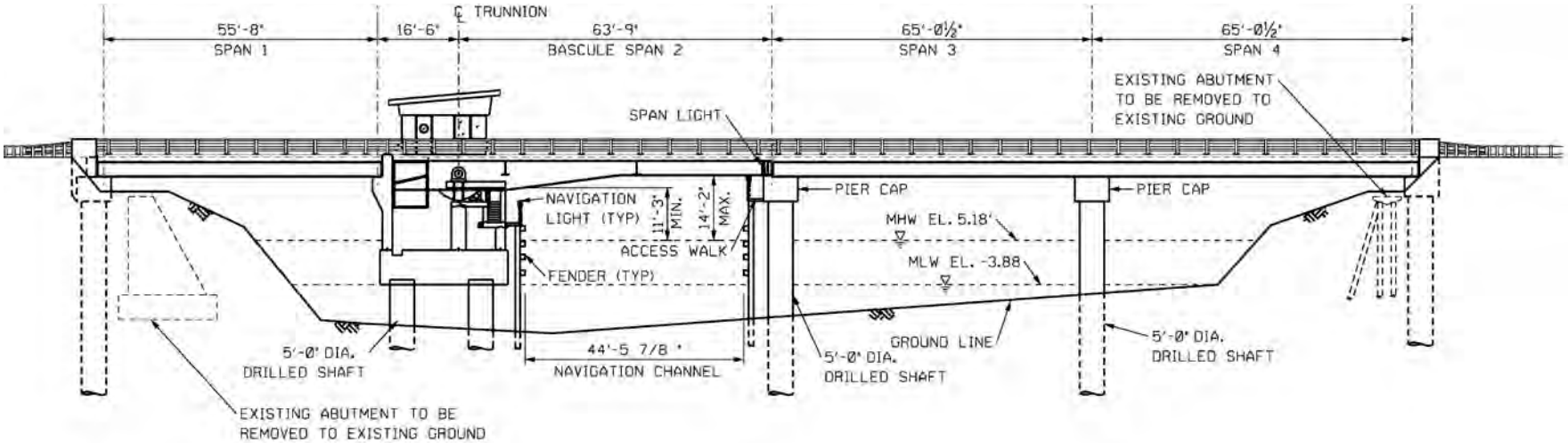

Comparison of Alternatives

Capital Cost comparisons assuming similar roadway widths

2' Shoulders

Alternative	Roadway Cost	Wall Cost	Bridge Cost	Engineering	Total
Major Rehabilitation	$296,000	$24,500	$13,860,000	$1,140,000	$15,321,000
Replacement	$296,000	$24,500	$13,900,000	$880,000	$15,101,000

4' Shoulders

Alternative	Roadway Cost	Wall Cost	Bridge Cost	Engineering	Total
Major Rehabilitation	$482,317	$280,000	$14,590,000	$1,230,000	$16,583,000
Replacement	$482,317	$280,000	$14,140,000	$920,000	$15,823,000

Comparison of Alternatives

Alternative	Capital Cost	Life Cycle Cost (Present Day Expenditure)	Life Cycle Cost (2013 Dollars)
Major Rehabilitation Alternative	$15.32 million	$41.555 Million	$19.532 Million
Replacement Alternative with NEXT Beam Approaches	$15.82 million	$24.298 Million	$16.286 Million

Recommendation

- Replacement is recommended
  - Shorter closure times are required, allowing construction to take place in the winter with closures from January to March
  - Lowest life-cycle costs ($24.3 Million with Present-Day Expenditure, $16.3 Million in 2013 Dollars)
  - Longer service life (75 Years)
  - Roadway shoulders would be 4’ wide
  - Closed deck system
  - Sidewalk on east side of bridge

Moving Forward

- Natural Resource Agency Coordination Meeting – January 15th
- Public Informational Meeting – January 30th
- Historic Resources
  - Submit determination of effect
  - Identifying potential mitigation measures
  - Coordination meeting with SHPO Feb 6th
  - Memorandum of Agreement
- 30% Design Submission July 2014
- Project advertised in 2017

Thank You