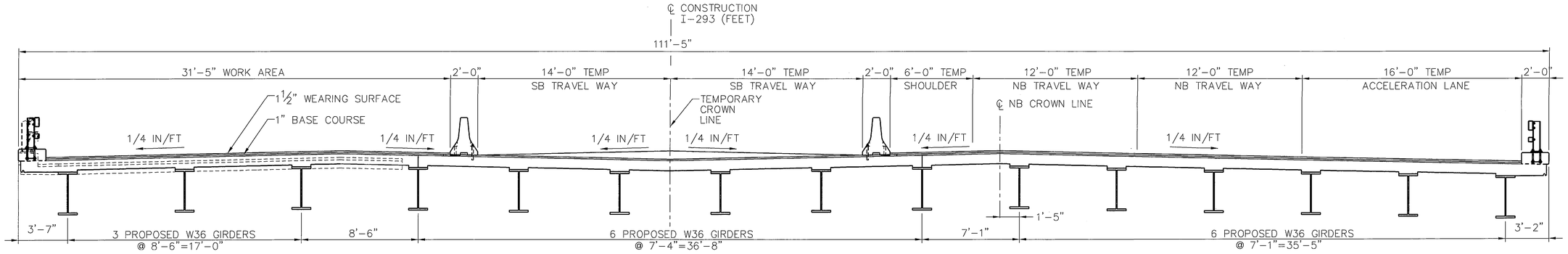

PHASE 3

SCALE ¼"=1'-0"

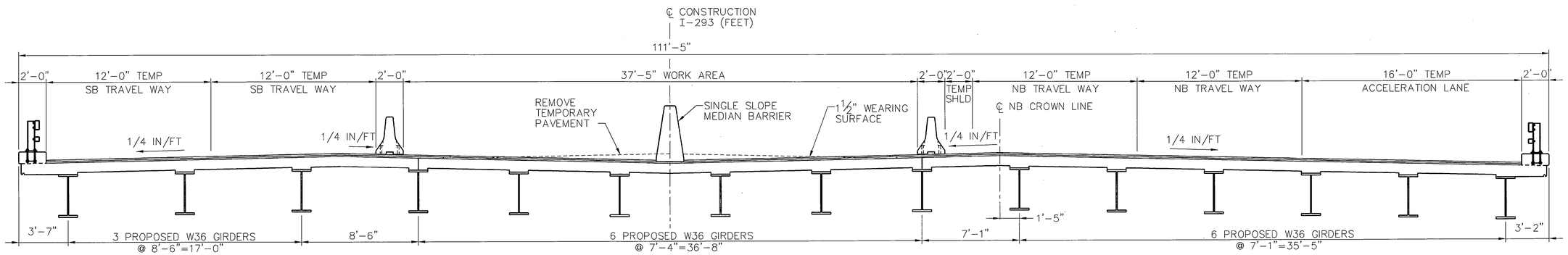

PHASE 4

SCALE ¼"=1'-0"

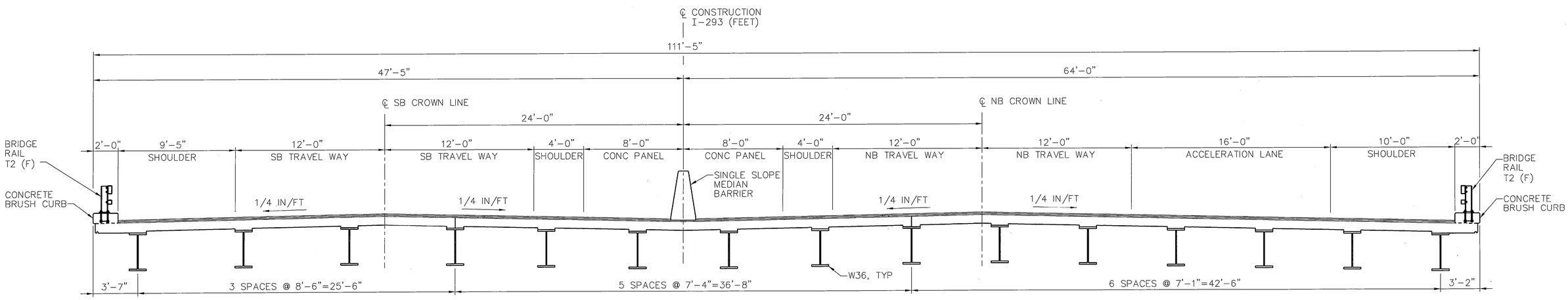

FINAL CROSS SECTION

SCALE ¼"=1'-0"

STATE OF NEW HAMPSHIRE
DEPARTMENT OF TRANSPORTATION * BUREAU OF BRIDGE DESIGN

TOWN | BRIDGE NO. | STATE PROJECT

LOCATION

CONSTRUCTION PHASING 2 OF 2

BRIDGE SHEET OF

REVISIONS AFTER PROPOSAL		BY	DATE		BY	DATE
	DESIGNED			CHECKED		
	DRAWN			CHECKED		
	QUANTITIES			CHECKED		
	ISSUE DATE		FEDERAL PROJECT NO.		SHEET NO.	
	REV. DATE					

FILE NUMBER

TOTAL SHEETS

SHEET SCALE
AS NOTED