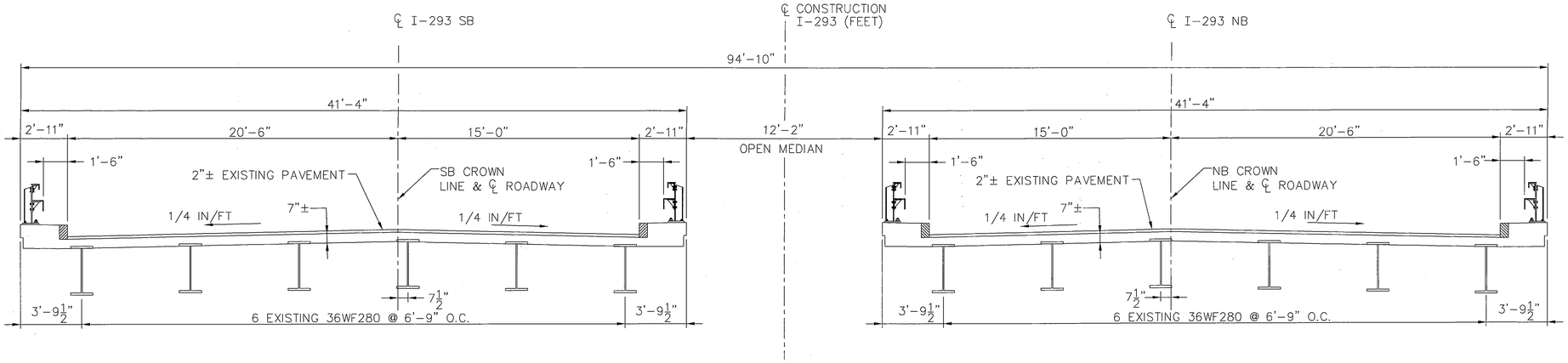

EXISTING DECK SECTION

SCALE ¼"=1'-0"

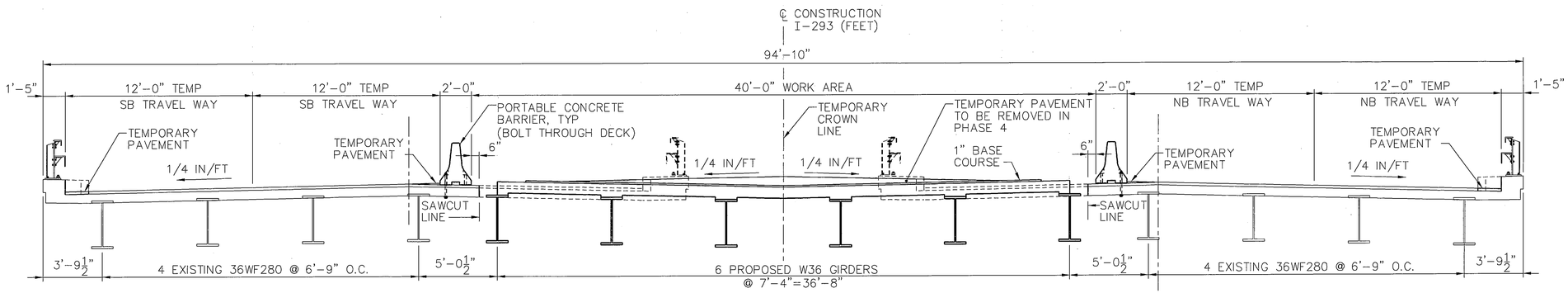

PHASE 1

SCALE ¼"=1'-0"

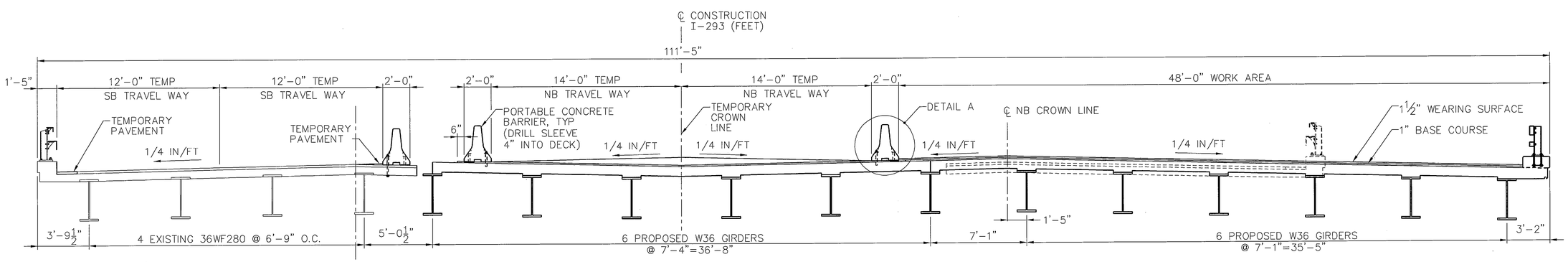

PHASE 2

SCALE ¼"=1'-0"

STATE OF NEW HAMPSHIRE
DEPARTMENT OF TRANSPORTATION * BUREAU OF BRIDGE DESIGN

TOWN | BRIDGE NO. | STATE PROJECT

LOCATION

CONSTRUCTION PHASING 1 OF 2

BRIDGE SHEET OF

REVISIONS AFTER PROPOSAL	BY	DATE		BY	DATE
			DESIGNED		CHECKED
			DRAWN		CHECKED
			QUANTITIES		CHECKED
			ISSUE DATE	FEDERAL PROJECT NO.	SHEET NO.
			REV. DATE		

FILE NUMBER

TOTAL SHEETS

SHEET SCALE: AS NOTED