STANDARD NO. PS-6B

| REVISION DATE |
| --- |
| 7-13-01 |

*.DGN FILE NAME
PS-6B

METRIC STANDARD PLANS

STATE OF NEW HAMPSHIRE
DEPARTMENT OF TRANSPORTATION, CONCORD, N.H.

STANDARD NO. PS-6B

# ANCHOR INSTALLATION & BRACKET SELECTION

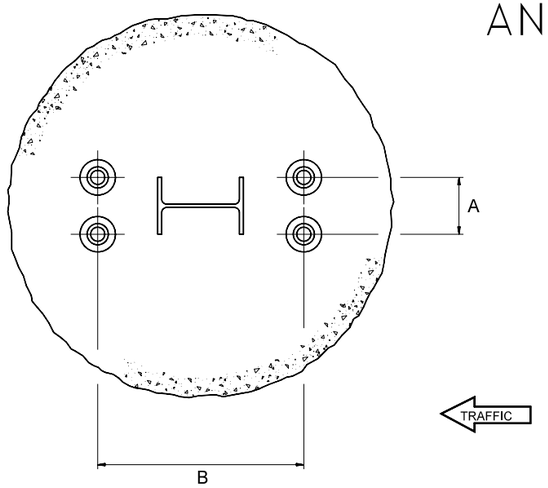


*PLAN VIEW OF FOOTINGS*

(SEE PS-3, PS-5A, OR PS-5B FOR FOOTING SIZES)

A = LATERAL SPACING OF ANCHORS

75 mm FOR B-525 USED ON 150 mm & 200 mm WIDE FLANGE POSTS

100 mm FOR B-650 USED ON 250 mm , 300 mm, & 350 mm WIDE FLANGE POSTS

108 mm FOR AI6 USED NO W150x14 WIDE FLANGE POSTS

B = LONGITUDINAL SPACING OF ANCHORS

* BRACKET #1 – DEPTH OF POST SECTION PLUS 202 mm

* BRACKET #2 – DEPTH OF POST SECTION PLUS 205 mm

* BRACKET #3 – DEPTH OF POST SECTION PLUS 206 mm

DEPTH OF POST SECTION PLUS 94 mm FOR AI6

* FOR B-525 & B-650 MOUNTS, SEE BRACKET TABLES

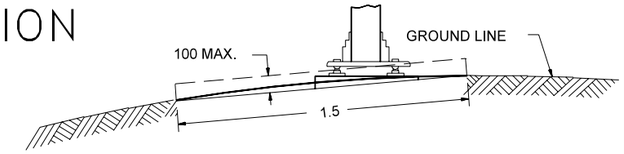


*MAXIMUM BREAKAWAY STUB HEIGHT*

BREAKAWAY SUPPORTS PLACED ON ROADSIDE SLOPES SHALL NOT ALLOW IMPACTING VEHICLES TO SNAG ON EITHER THE FOUNDATION OR ANY SUBSTANTIAL REMAINS OF THE SUPPORT. SURROUNDING TERRAIN SHALL BE GRADED TO PERMIT VEHICLES TO PASS OVER ANY NON-BREAKAWAY PORTION OF THE SIGN INSTALLATION WHICH REMAINS IN THE GROUND OR RIGIDLY ATTACHED TO THE FOUNDATION.

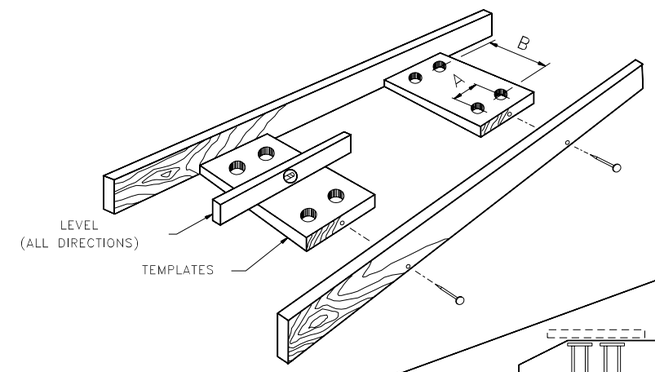


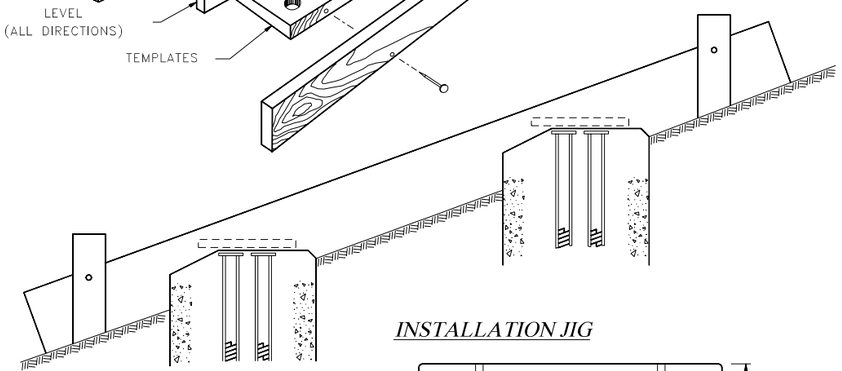

*INSTALLATION JIG*

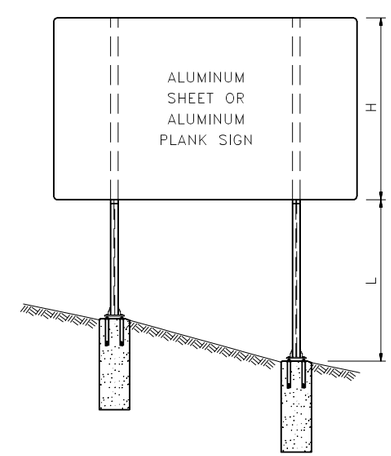


150 mm POST

POST LENGTH = L+H(mm)

SIGN HEIGHT = H(mm)

| | 3000 | 3300 | 3600 | 3900 | 4200 | 4500 | 4800 | 5100 | 5400 | 5700 | 6000 | 6300 | 6600 | 6900 | 7200 | 7500 |
| --- | --- | --- | --- | --- | --- | --- | --- | --- | --- | --- | --- | --- | --- | --- | --- | --- |
| 900 | | | | | | | | | | | | | | | | |
| 1200 | | | | | | | | | | | | | | | | |
| 1500 | | | | | | | | | | | | | | | | |
| 1800 | | | | | | | | | | | | | 1 | | | |
| 2100 | | | | | | | | | | | | | | | | |
| 2400 | | | | | | | | | | | | | | | | |
| 2700 | | | | | | | | | | | 2 | | | | | |
| 3000 | | | | | | | | | | | | | | | | |
| 3300 | | | | | | | | | | | | | | | | |
| 3600 | | | | | | | | | | | | | | | | |
| 3900 | | | 3 | | | | | | | | | | | | | |
| 4200 | | | | | | | | | | | | | | | | |
| 4500 | | | | | | | | | | | | | | | | |

200 mm POST

POST LENGTH = L+H(mm)

SIGN HEIGHT = H(mm)

| | 3000 | 3300 | 3600 | 3900 | 4200 | 4500 | 4800 | 5100 | 5400 | 5700 | 6000 | 6300 | 6600 | 6900 | 7200 | 7500 |
| --- | --- | --- | --- | --- | --- | --- | --- | --- | --- | --- | --- | --- | --- | --- | --- | --- |
| 900 | | | | | | | | | | | | | | | | |
| 1200 | | | | | | | | | | | | | | | | |
| 1500 | | | | | | | | | | | | | | | | |
| 1800 | | | | | | | | | | | | | 1 | | | |
| 2100 | | | | | | | | | | | | | | | | |
| 2400 | | | | | | | | | | | | | | | | |
| 2700 | | | | | | | | | | | 2 | | | | | |
| 3000 | | | | | | | | | | | | | | | | |
| 3300 | | | | | | | | | | | | | | | | |
| 3600 | | | | | | | | | | | | | | | | |
| 3900 | | | 3 | | | | | | | | | | | | | |
| 4200 | | | | | | | | | | | | | | | | |
| 4500 | | | | | | | | | | | | | | | | |

*BRACKET TABLES FOR B-525-LP MOUNTS*

250 mm POST

POST LENGTH = L+H(mm)

SIGN HEIGHT = H(mm)

| | 3000 | 3300 | 3600 | 3900 | 4200 | 4500 | 4800 | 5100 | 5400 | 5700 | 6000 | 6300 | 6600 | 6900 | 7200 | 7500 |
| --- | --- | --- | --- | --- | --- | --- | --- | --- | --- | --- | --- | --- | --- | --- | --- | --- |
| 900 | | | | | | | | | | | | | | | | |
| 1200 | | | | | | | | | | | | | | | | |
| 1500 | | | | | | | | | | | | | | 1 | | |
| 1800 | | | | | | | | | | | | | | | | |
| 2100 | | | | | | | | | | | | | | | | |
| 2400 | | | | | | | | | | | | | | | | |
| 2700 | | | | | | | | | | | 2 | | | | | |
| 3000 | | | | | | | | | | | | | | | | |
| 3300 | | | | | | | | | | | | | | | | |
| 3600 | | | | | | | | | | | | | | | | |
| 3900 | | | 3 | | | | | | | | | | | | | |
| 4200 | | | | | | | | | | | | | | | | |
| 4500 | | | | | | | | | | | | | | | | |

300 mm POST

POST LENGTH = L+H(mm)

SIGN HEIGHT = H(mm)

| | 3000 | 3300 | 3600 | 3900 | 4200 | 4500 | 4800 | 5100 | 5400 | 5700 | 6000 | 6300 | 6600 | 6900 | 7200 | 7500 |
| --- | --- | --- | --- | --- | --- | --- | --- | --- | --- | --- | --- | --- | --- | --- | --- | --- |
| 900 | | | | | | | | | | | | | | | | |
| 1200 | | | | | | | | | | | | | | | | |
| 1500 | | | | | | | | | | | | | | 1 | | |
| 1800 | | | | | | | | | | | | | | | | |
| 2100 | | | | | | | | | | | | | | | | |
| 2400 | | | | | | | | | | | 2 | | | | | |
| 2700 | | | | | | | | | | | | | | | | |
| 3000 | | | | | | | | | | | | | | | | |
| 3300 | | | | | | | | | | | | | | | | |
| 3600 | | | | 3 | | | | | | | | | | | | |
| 3900 | | | | | | | | | | | | | | | | |
| 4200 | | | | | | | | | | | | | | | | |
| 4500 | | | | | | | | | | | | | | | | |

350 mm POST

POST LENGTH = L+H(mm)

SIGN HEIGHT = H(mm)

| | 3000 | 3300 | 3600 | 3900 | 4200 | 4500 | 4800 | 5100 | 5400 | 5700 | 6000 | 6300 | 6600 | 6900 | 7200 | 7500 |
| --- | --- | --- | --- | --- | --- | --- | --- | --- | --- | --- | --- | --- | --- | --- | --- | --- |
| 900 | | | | | | | | | | | | | | | | |
| 1200 | | | | | | | | | | | | | | | | |
| 1500 | | | | | | | | | | | | | | 1 | | |
| 1800 | | | | | | | | | | | | | | | | |
| 2100 | | | | | | | | | | | | | | | | |
| 2400 | | | | | | | | | | | 2 | | | | | |
| 2700 | | | | | | | | | | | | | | | | |
| 3000 | | | | | | | | | | | | | | | | |
| 3300 | | | | | | | | | | | | | | | | |
| 3600 | | | | | 3 | | | | | | | | | | | |
| 3900 | | | | | | | | | | | | | | | | |
| 4200 | | | | | | | | | | | | | | | | |
| 4500 | | | | | | | | | | | | | | | | |

*BRACKET TABLES FOR B-650-LP MOUNTS*

SELECT CORRECT BRACKET NUMBER BY LOCATING THE INTERSECTION OF SIGN HEIGHT AND POST LENGTH IN THE BRACKET SELECTION MATRIX. THE INTERSECTION WILL BE EITHER ZONE 1, 2, OR 3 WHICH CORRESPONDS TO BRACKET NUMBERS 1, 2, OR 3.

ALL DIMENSIONS SHOWN ARE IN MILLIMETERS OR METERS. WHOLE NUMBERS INDICATE MILLIMETERS; DECIMAL NUMBERS INDICATE METERS UNLESS OTHERWISE NOTED.



PERMANENT SIGNING STANDARD

*BREAKAWAY MOUNTS*

STANDARD NO. PS-6B

| REVISION DATE |
| --- |
| 7-13-01 |

*.DGN FILE NAME
PS-6B

METRIC STANDARD PLANS

STATE OF NEW HAMPSHIRE
DEPARTMENT OF TRANSPORTATION, CONCORD, N.H.

STANDARD NO. PS-6B