STANDARD
NO. PS-6A

REVISION DATE
7-13-01

*.DGN FILE NAME
PS-6A

METRIC
STANDARD PLANS

STATE OF NEW HAMPSHIRE
DEPARTMENT OF TRANSPORTATION, CONCORD, N.H.

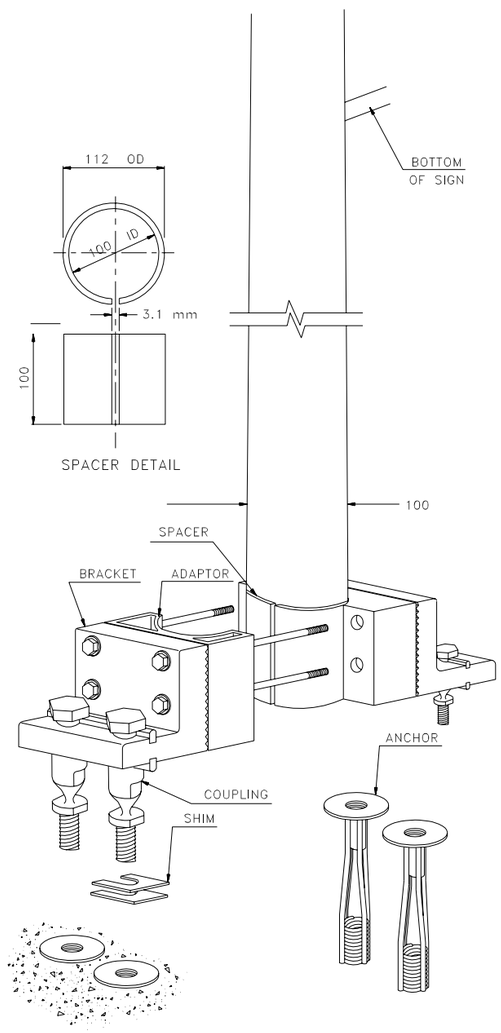

TRANSPO TYPE APx4.5 (S/B) (OR EQUAL)
USE FOR 100 mm DIAMETER ALUMINUM TUBE

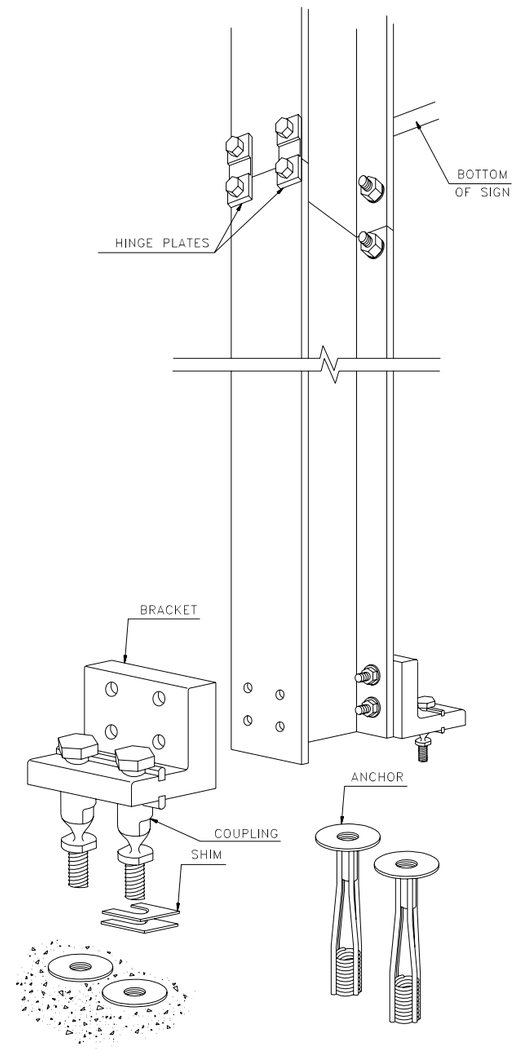

TRANSPO TYPE AI6-LP (OR EQUAL)
USE FOR W150x14 STEEL BEAM

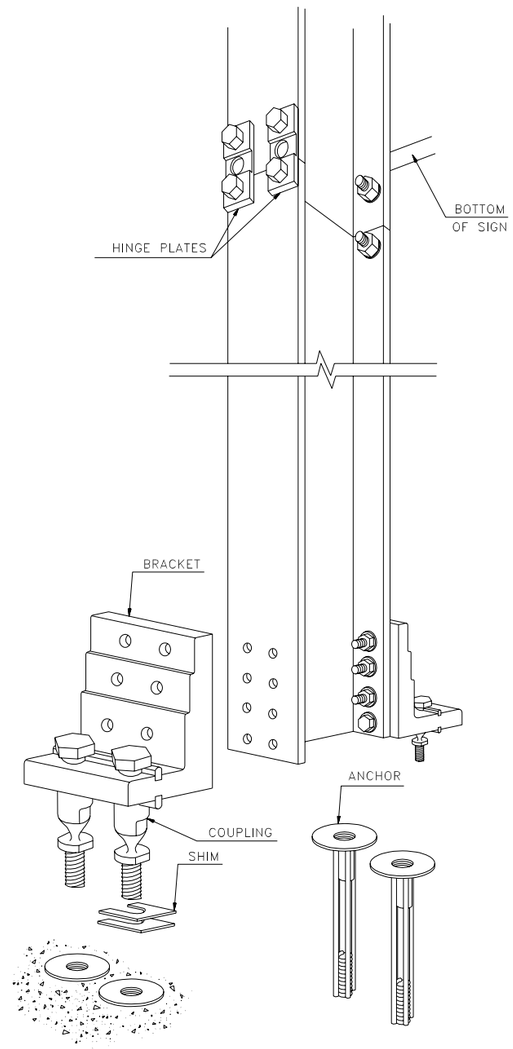

TRANSPO TYPE B-525-LP (OR EQUAL)
USE FOR W150x18, W150x22, W200x27, OR W200x31 STEEL BEAMS

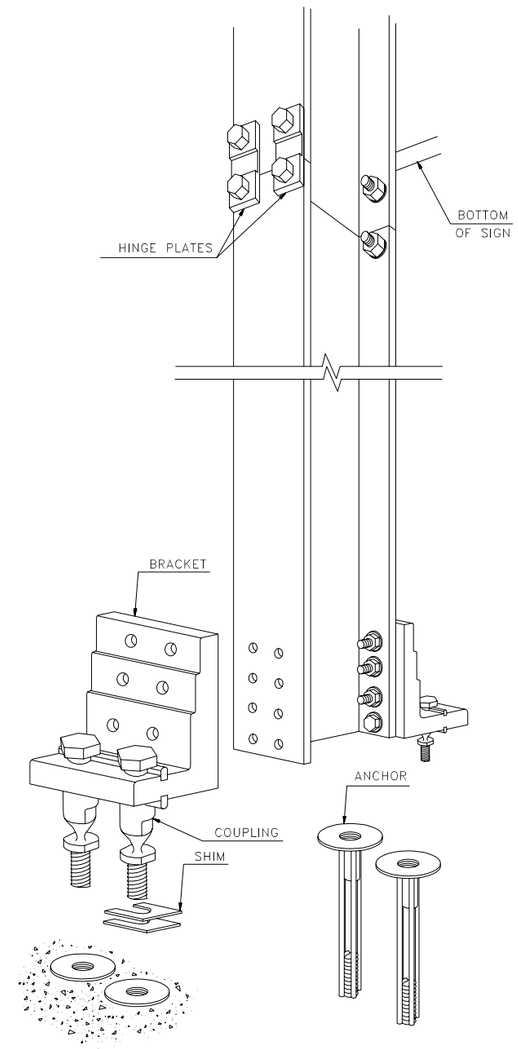

TRANSPO TYPE B-650-LP (OR EQUAL)
USE FOR W250x33, W250x39, W310x39, OR W360x45 STEEL BEAMS

GENERAL NOTES

1. ASSEMBLE ACCORDING TO MANUFACTURER'S INSTRUCTIONS.
2. SEE PS-5A OR PS-5B FOR STEEL BEAM SIZES.
3. SEE PS-6B FOR BRACKET SELECTION TABLES FOR TYPE B525-LP & B-650-LP.

PERMANENT SIGNING STANDARD

ALL DIMENSIONS SHOWN ARE IN MILLIMETERS OR METERS. WHOLE NUMBERS INDICATE MILLIMETERS; DECIMAL NUMBERS INDICATE METERS UNLESS OTHERWISE NOTED.

BREAKAWAY MOUNTS

STANDARD
NO. PS-6A

REVISION DATE
7-13-01

*.DGN FILE NAME
PS-6A

METRIC
STANDARD PLANS

STATE OF NEW HAMPSHIRE
DEPARTMENT OF TRANSPORTATION, CONCORD, N.H.

STANDARD
NO. PS-6A