STANDARD NO. PS-1B

REVISION DATE
7-13-01

*.DGN FILE NAME
PS-1B

METRIC STANDARD PLANS

STATE OF NEW HAMPSHIRE
DEPARTMENT OF TRANSPORTATION, CONCORD, N.H.

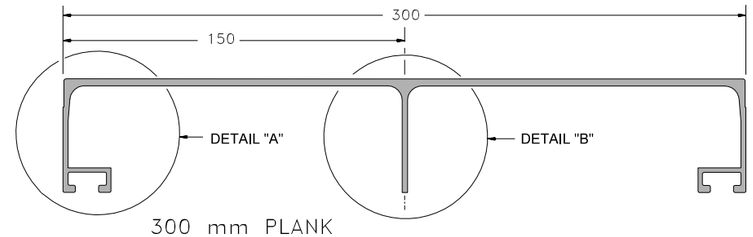

300 mm PLANK

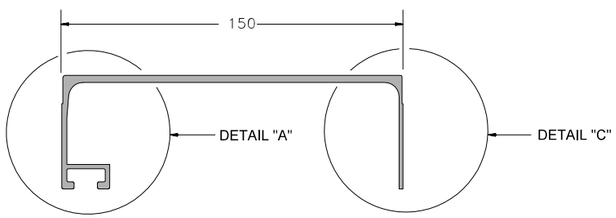

150 mm PLANK

EXTRUDED ALUMINUM SIGN PLANK

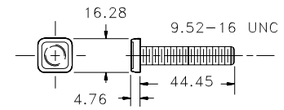

POST CLIP BOLT

ASTM B 211M, ALLOY 2024–T4 OR 6061–T6
ALL DIMESIONS SHOWN ARE IN MILLIMETERS

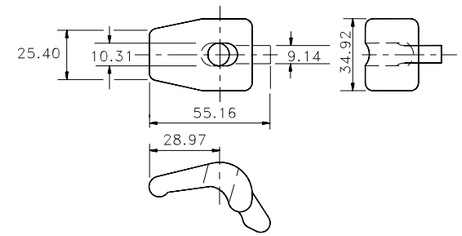

POST CLIP

ASTM B 108M, ALLOY 356.0–T6
ALL DIMENSIONS SHOWN ARE IN MILLIMETERS

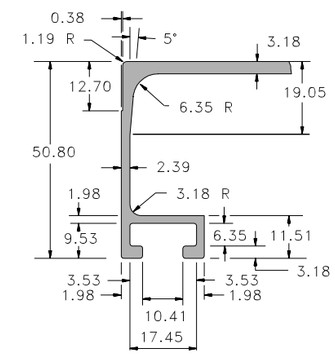

DETAIL "A"

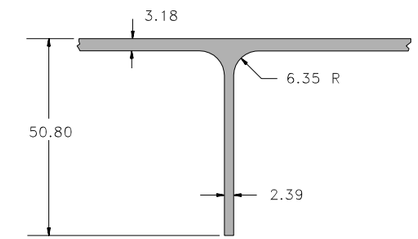

DETAIL "B"

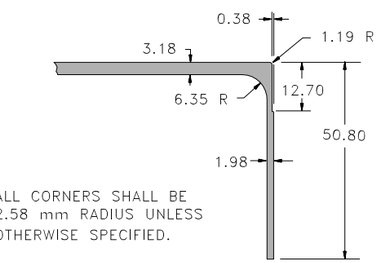

NOTE: ALL CORNERS SHALL BE 2.58 mm RADIUS UNLESS OTHERWISE SPECIFIED.

DETAIL "C"

STIFFENER DETAILS

ALL DIMENSIONS SHOWN ARE IN MILLIMETERS

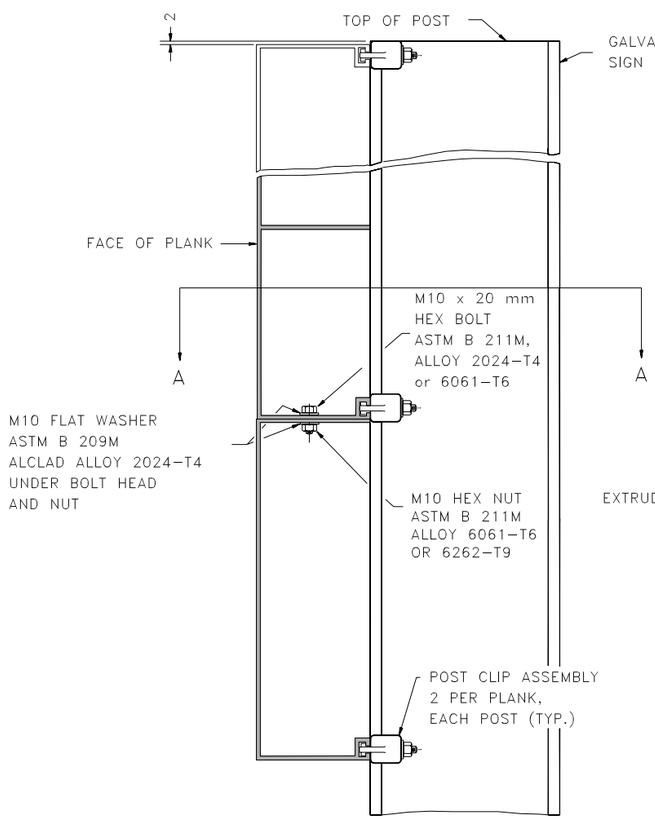

END VIEW

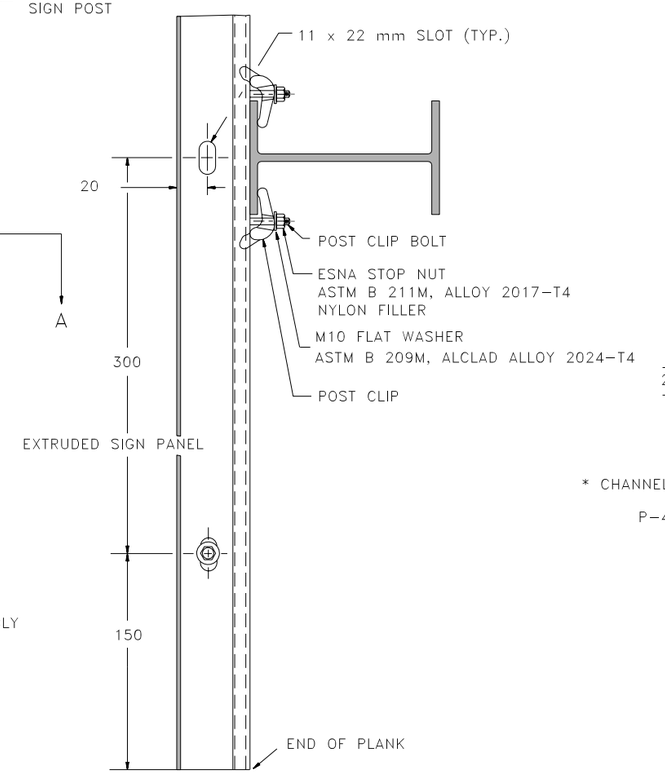

SECTION A-A

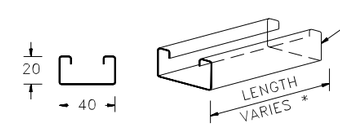

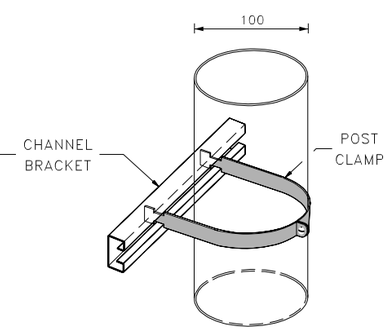

* CHANNEL BRACKET LENGTH = 200 mm (MIN.)

P–4100 EG CHANNEL 1.9 mm THICK

P–1120–EG POST CLAMP 101.6 mm DIA. 3.0 mm

POST CLAMP ASSEMBLIES

1. HARDWARE SHALL BE UNISTRUT OR EQUAL
2. FINISH SHALL BE ELECTRO–GALVANIZED
3. USE 8 mm STAINLESS STEEL CAP SCREW WITH 22 mm O.D. WASHER & LOCKNUT FOR BRACKET TO SIGN CONNECTION

2 OF 2

ALL DIMENSIONS SHOWN ARE IN MILLIMETERS OR METERS. WHOLE NUMBERS INDICATE MILLIMETERS; DECIMAL NUMBERS INDICATE METERS UNLESS OTHERWISE NOTED.

PERMANENT SIGNING STANDARD

ALUMINUM PLANK DETAILS

STANDARD NO. PS-1B

REVISION DATE
7-13-01

*.DGN FILE NAME
PS-1B

METRIC STANDARD PLANS

STATE OF NEW HAMPSHIRE
DEPARTMENT OF TRANSPORTATION, CONCORD, N.H.

STANDARD NO. PS-1B