STANDARD NO. HW-3

REVISION DATE
7-13-01

*.DGN FILE NAME
HW-3

METRIC STANDARD PLANS

STATE OF NEW HAMPSHIRE
DEPARTMENT OF TRANSPORTATION, CONCORD, N.H.

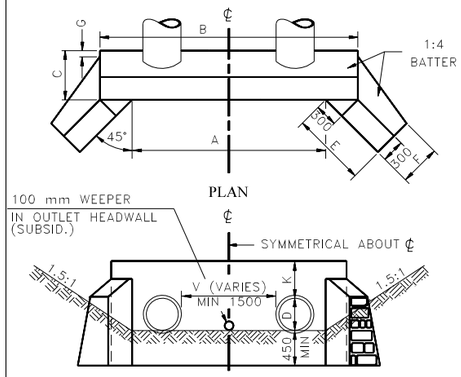

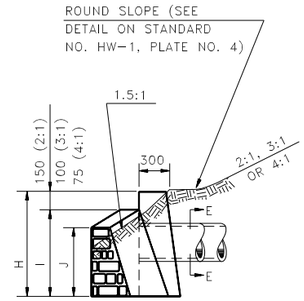

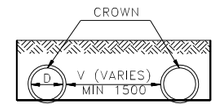

SECTION E-E

EXCAVATION BETWEEN PIPES INCLUDED IN STRUCTURE EXCAVATION

DIMENSIONS SHOWN ARE TO PAYMENT LINES. MASONRY TO BE STEPPED OUTSIDE PAYMENT LINES ON SLOPING FACES.

2:1 SLOPE (FOR 3:1 AND 4:1 SLOPES SEE PLATE 2)

DIAMETER D(mm)	QUANTITIES PER HEADER				DIMENSIONS									
	M.R.M. m3 V=1.5	M.R.M. PER 100 mm ADD. LENGTH V=1.5	EXC. FOR 100 mm DEPTH V=1.5	EXC. PER 100 mm ADD. LENGTH 100 mm DEPTH m3	A V=1.5	B V=1.5	C	E	F	G	H	I	J	K
600	3.36	0.075	0.77	0.013	3000	3850	675	875	575	150	1500	1350	1150	450
750	4.25	0.087	0.90	0.013	3350	4200	725	1050	600	125	1650	1500	1225	450
900	5.13	0.098	1.01	0.014	3700	4550	750	1225	625	100	1800	1650	1300	450
1050	6.69	0.115	1.17	0.014	4050	4900	800	1500	650	75	2025	1875	1450	525
1200	7.97	0.129	1.33	0.015	4400	5250	850	1700	675	50	2175	2025	1525	525
1350	9.23	0.141	1.47	0.015	4750	5600	875	1875	700	25	2325	2175	1600	525
1500	10.77	0.156	1.62	0.015	5100	5950	925	2050	725	25	2475	2325	1700	525
1650	12.27	0.169	1.76	0.016	5450	6300	950	2225	750	0	2625	2475	1775	525
1800	14.08	0.186	1.91	0.016	5800	6650	1000	2425	775	−25	2775	2625	1875	525

ALL DIMENSIONS SHOWN ARE IN MILLIMETERS OR METERS. WHOLE NUMBERS INDICATE MILLIMETERS; DECIMAL NUMBERS INDICATE METERS UNLESS OTHERWISE NOTED.

NHDOT STANDARD PLANS
MORTAR RUBBLE MASONRY HEADWALLS WITH 45° WINGS FOR TWIN R. C. PIPES *P.C.-10*

REV. DATE | PLATE 1 | STANDARD HW-3

3:1 SLOPE

DIAMETER D (mm)	QUANTITIES PER HEADER				DIMENSIONS									
	M.R.M. m3 V=1.5	M.R.M. PER 100 mm ADD. LENGTH V=1.5	EXC. FOR 100 mm DEPTH V=1.5	EXC. PER 100 mm ADD. LENGTH 100 mm DEPTH m3	A V=1.5	B V=1.5	C	E	F	G	H	I	J	K
600	3.65	0.075	0.82	0.013	3000	3850	675	1050	600	150	1500	1400	1225	450
750	4.65	0.087	0.96	0.013	3350	4200	725	1275	625	150	1650	1550	1325	450
900	5.64	0.098	1.09	0.014	3700	4550	750	1475	650	100	1800	1700	1425	450
1050	7.43	0.115	1.27	0.014	4050	4900	800	1800	700	75	2025	1925	1575	525
1200	8.86	0.129	1.43	0.015	4400	5250	850	2000	725	75	2175	2075	1675	525
1350	10.34	0.141	1.57	0.015	4750	5600	875	2225	750	50	2325	2225	1775	525
1500	12.08	0.156	1.74	0.015	5100	5950	925	2425	775	25	2475	2375	1875	525
1650	13.84	0.169	1.90	0.016	5450	6300	950	2650	800	0	2625	2525	1975	525
1800	15.90	0.186	2.07	0.016	5800	6650	1000	2850	825	0	2775	2675	2075	525

4:1 SLOPE

DIAMETER D (mm)	QUANTITIES PER HEADER				DIMENSIONS									
	M.R.M. m3 V=1.5	M.R.M. PER 100 mm ADD. LENGTH V=1.5	EXC. FOR 100 mm DEPTH V=1.5	EXC. PER 100 mm ADD. LENGTH 100 mm DEPTH m3	A V=1.5	B V=1.5	C	E	F	G	H	I	J	K
600	3.83	0.075	0.85	0.013	3000	3850	675	1150	625	150	1500	1425	1275	450
750	4.87	0.087	0.99	0.013	3350	4200	725	1375	650	150	1650	1575	1375	450
900	5.96	0.098	1.12	0.014	3700	4550	750	1600	675	100	1800	1725	1500	450
1050	7.88	0.115	1.32	0.014	4050	4900	800	1950	725	75	2025	1950	1650	525
1200	9.44	0.129	1.48	0.015	4400	5250	850	2175	750	75	2175	2100	1775	525
1350	11.06	0.141	1.64	0.015	4750	5600	875	2425	775	50	2325	2250	1875	525
1500	12.88	0.156	1.81	0.015	5100	5950	925	2650	800	25	2475	2400	1975	525
1650	14.84	0.169	1.98	0.016	5450	6300	950	2875	825	25	2625	2550	2100	525
1800	17.02	0.186	2.16	0.016	5800	6650	1000	3125	850	0	2775	2700	2200	525

ALL DIMENSIONS SHOWN ARE IN MILLIMETERS OR METERS. WHOLE NUMBERS INDICATE MILLIMETERS; DECIMAL NUMBERS INDICATE METERS UNLESS OTHERWISE NOTED.

NHDOT STANDARD PLANS
MORTAR RUBBLE MASONRY HEADWALLS WITH 45° WINGS FOR TWIN R. C. PIPES *P.C.-10*

REV. DATE | PLATE 2 | STANDARD HW-3

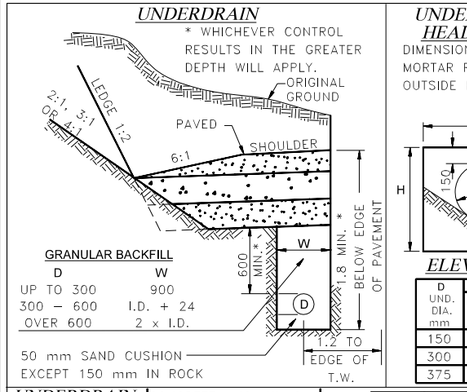

UNDERDRAIN HEADWALL

CONCRETE	NO. UH-1
MOR. RUB. MAS.	NO. UH-2

DIMENSIONS SHOWN ARE TO PAYMENT LINES. MORTAR RUBBLE MASONRY TO BE STEPPED OUTSIDE PAYMENT LINES ON SLOPING FACE.

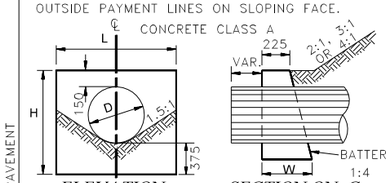

D UND. DIA. mm	PER HEADER MAS'RY m3	PER HEADER EXC. PER 100 mm DEPTH m3	L	H	W
150	0.13	0.12	600	675	395
300	0.24	0.17	950	825	430
375	0.33	0.19	1150	900	450

UNDERDRAIN "L" HEADWALL

CONCRETE	NO. UL-1
MOR. RUB. MAS.	NO. UL-3

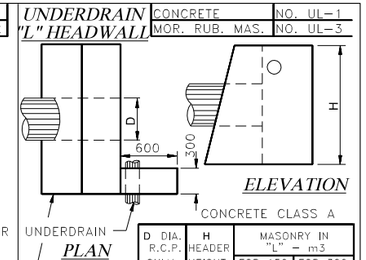

D DIA. R.C.P. CULV. mm	H HEADER HEIGHT mm	MASONRY IN "L" – m3 FOR 150 UND.	MASONRY IN "L" – m3 FOR 300 UND.
375	1275	0.23	0.21
450	1350	0.24	0.22
600	1500	0.28	0.25
750	1650	0.31	0.28
900	1800	0.33	0.31

UNDERDRAIN "L" HEADWALL

CONCRETE	NO. UL-2
MOR. RUB. MAS.	NO. UL-4

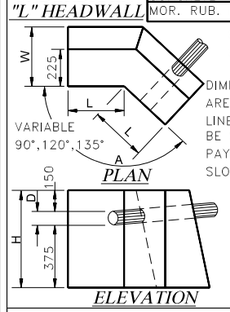

D (mm) UND. DIA.	A	PER HEADER MAS'RY m3	PER HEADER EXC. PER 100 mm DEPTH m3	L mm	H mm	W mm
150	90°	0.23	0.18	375	675	395
150	120°	0.20	0.16	375	675	395
150	135°	0.19	0.16	375	675	395
300	90°	0.41	0.24	600	825	430
300	120°	0.37	0.22	600	825	430
300	135°	0.36	0.21	600	825	430
375	90°	0.55	0.28	750	900	450
375	120°	0.50	0.26	750	900	450
375	135°	0.49	0.25	750	900	450
450	90°	0.65	0.30	825	975	470
450	120°	0.60	0.28	825	975	470
450	135°	0.59	0.27	825	975	470
600	90°	0.96	0.37	1050	1125	505
600	120°	0.90	0.34	1050	1125	505
600	135°	0.87	0.33	1050	1125	505

C.B. (OR HEADER) C.B.

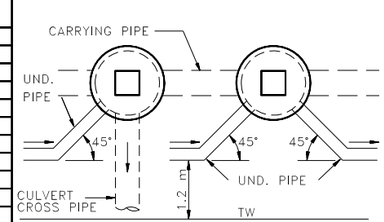

PLAN VIEWS

SKETCHES FOR 45° BENDS AND PLACEMENT IN SHOULDER FOR UNDERDRAIN PIPES

ALL DIMENSIONS SHOWN ARE IN MILLIMETERS OR METERS. WHOLE NUMBERS INDICATE MILLIMETERS; DECIMAL NUMBERS INDICATE METERS UNLESS OTHERWISE NOTED.

NHDOT STANDARD PLANS
UNDERDRAIN HEADWALLS & UNDERDRAIN "L" HEADWALLS

REV. DATE | PLATE 3 | STANDARD HW-3

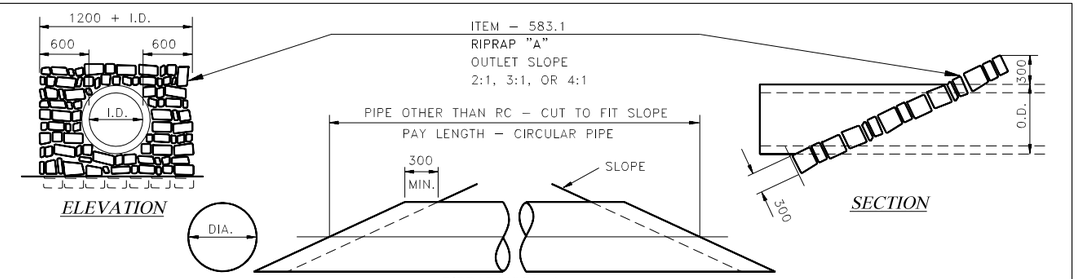

RIPRAP "A" IN m3

INSIDE DIAM. PIPE mm	REINFORCED CONCRETE PIPE 2:1	3:1	4:1	PIPE OTHER THAN R.C. 2:1	3:1	4:1
300	0.64	0.92	1.20	0.58	0.83	1.08
375	0.74	1.05	1.37	0.67	0.94	1.24
450	0.83	1.18	1.54	0.76	1.07	1.40
525	–	–	–	0.85	1.20	1.54
600	1.02	1.44	1.88	0.94	1.33	1.74
750	1.21	1.71	2.23	1.13	1.60	2.09
900	1.40	1.98	2.58	1.32	1.87	2.45
1050	1.59	2.26	2.94	1.53	2.16	2.82
1200	1.79	2.53	3.32	1.74	2.45	3.21
1350	2.00	2.82	3.68	1.95	2.76	3.62
1500	2.20	3.11	4.06	2.17	3.08	4.02
1650	2.41	3.39	4.44	2.41	3.40	4.44
1800	2.61	3.69	4.83	2.65	3.74	4.88

NOTE: FOR PIPES WITH QUANTITIES BELOW HEAVY LINE, STD. HEADWALLS WILL GENERALLY BE REQUIRED.

ALL DIMENSIONS SHOWN ARE IN MILLIMETERS OR METERS. WHOLE NUMBERS INDICATE MILLIMETERS; DECIMAL NUMBERS INDICATE METERS UNLESS OTHERWISE NOTED.

NHDOT STANDARD PLANS
SLOPE PAVING FOR PIPE OUTLETS

REV. DATE | PLATE 4 | STANDARD HW-3

STANDARD NO. HW-3

REVISION DATE
7-13-01

*.DGN FILE NAME
HW-3

METRIC STANDARD PLANS

STATE OF NEW HAMPSHIRE
DEPARTMENT OF TRANSPORTATION, CONCORD, N.H.

STANDARD NO. HW-3