STANDARD NO. HW-1

REVISION DATE
7-13-01

*.DGN FILE NAME
HW-1

METRIC STANDARD PLANS

STATE OF NEW HAMPSHIRE
DEPARTMENT OF TRANSPORTATION, CONCORD, N.H.

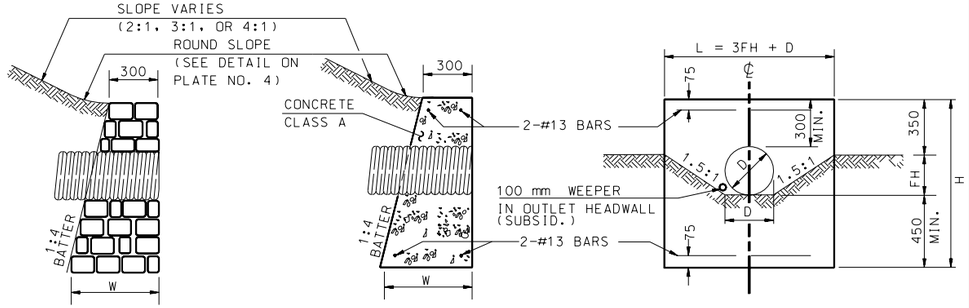

SECTION ON CENTERLINE

ELEVATION

DIMENSIONS SHOWN ARE TO PAYMENT LINES. MORTAR RUBBLE MASONRY TO BE STEPPED OUTSIDE PAYMENT LINES ON SLOPING FACES.

NOTE: STEEL QUANTITIES ARE FOR CONCRETE HEADWALLS ONLY.

DIAMETER D (mm)	MASONRY PER 100 mm OF WALL m3	MASONRY PER STANDARD HEADER m3	STEEL PER STANDARD HEADER kg	LENGTH OF BARS mm	HEADER EXC. PER HEADER 100 mm DEPTH m3	HEADER LENGTH L mm	HEADER HEIGHT H mm	FILL HEIGHT FH mm	WIDTH AT BOTTOM OF HEADER W mm	"L" HEADWALL MASONRY IN CORNER FRUSTRUM m3	"L" HEADWALL HEADER EXC. PER HEADER 100 mm DEPTH m3
300	0.047	0.47	4	950	0.198	1050	1050	250	565	0.21	0.265
375	0.051	0.65	5	1150	0.238	1350	1125	325	580	0.24	0.309
450	0.056	0.86	6	1550	0.279	1650	1200	400	600	0.27	0.353
600	0.065	1.36	9	2150	0.364	2250	1350	550	640	0.32	0.446
750	0.076	1.97	11	2750	0.454	2850	1500	700	675	0.39	0.543
900	0.086	2.70	14	3350	0.549	3450	1650	850	715	0.47	0.645
1050	0.098	3.56	16	3950	0.647	4050	1800	1000	750	0.55	0.753
1200	0.109	4.55	19	4550	0.753	4650	1950	1150	790	0.64	0.865
1350	0.122	5.69	21	5150	0.861	5250	2100	1300	825	0.75	0.982
1500	0.135	6.98	24	5750	0.974	5850	2250	1450	865	0.86	1.104
1650	0.149	8.44	26	6350	1.091	6450	2400	1600	900	0.98	1.231
1800	0.163	10.07	29	6950	1.214	7050	2550	1750	940	1.12	1.363

NOTE: FOR PLAN OF "L" HEADWALL SEE PLATE NO. 1 OF STD. NO. HW-2

ALL DIMENSIONS SHOWN ARE IN MILLIMETERS OR METERS. WHOLE NUMBERS INDICATE MILLIMETERS; DECIMAL NUMBERS INDICATE METERS UNLESS OTHERWISE NOTED.

NHDOT STANDARD PLANS
HEADWALLS FOR PIPES OTHER THAN R.C.:
CONCRETE P.C.-1
MORTAR RUBBLE MASONRY P.C.-2

REV. DATE

PLATE 1
STANDARD HW-1

DIMENSIONS SHOWN ARE TO PAYMENT LINES. MORTAR RUBBLE MASONRY TO BE STEPPED OUTSIDE PAYMENT LINES ON SLOPING FACES.

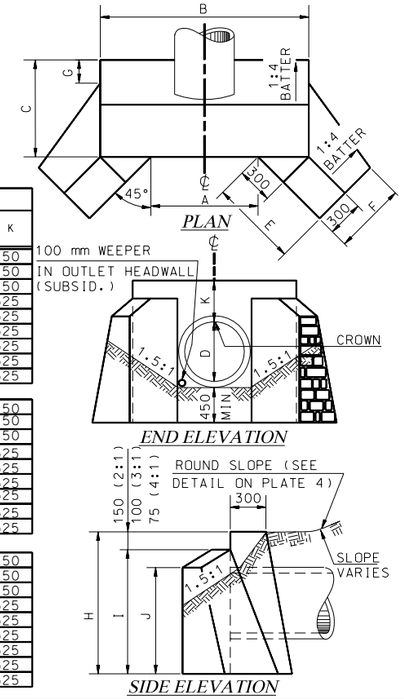

2:1 SLOPE

DIAMETER D(mm)	QUANTITIES PER HEADER M.R.M. m3	QUANTITIES PER HEADER EXC. FOR 100 mm DEPTH m3	A	B	C	E	F	G	H	I	J	K
600	1.87	0.47	750	1600	675	875	575	150	1500	1350	1150	450
750	2.44	0.57	925	1775	725	1050	600	125	1650	1500	1225	450
900	3.08	0.64	1100	1950	750	1225	625	100	1800	1650	1300	450
1050	4.21	0.78	1275	2125	800	1500	650	75	2025	1875	1450	525
1200	5.11	0.89	1450	2300	850	1700	675	50	2175	2025	1525	525
1350	6.06	0.99	1625	2475	875	1875	700	25	2325	2175	1600	525
1500	7.18	1.10	1800	2650	925	2050	725	25	2475	2325	1700	525
1650	8.33	1.21	1975	2825	950	2225	750	0	2625	2475	1775	525
1800	9.68	1.31	2150	3000	1000	2425	775	-25	2775	2625	1875	525

3:1 SLOPE

DIAMETER D(mm)	M.R.M. m3	EXC. FOR 100 mm DEPTH m3	A	B	C	E	F	G	H	I	J	K
600	2.15	0.52	750	1600	675	1050	600	150	1500	1400	1225	450
750	2.85	0.63	925	1775	725	1275	625	150	1650	1550	1325	450
900	3.59	0.73	1100	1950	750	1475	650	100	1800	1700	1425	450
1050	4.95	0.87	1275	2125	800	1800	700	75	2025	1925	1575	525
1200	6.00	0.99	1450	2300	850	2000	725	75	2175	2075	1675	525
1350	7.16	1.10	1625	2475	875	2225	750	50	2325	2225	1775	525
1500	8.49	1.22	1800	2650	925	2425	775	25	2475	2375	1875	525
1650	9.90	1.34	1975	2825	950	2650	800	0	2625	2525	1975	525
1800	11.49	1.47	2150	3000	1000	2850	825	0	2775	2675	2075	525

4:1 SLOPE

DIAMETER D(mm)	M.R.M. m3	EXC. FOR 100 mm DEPTH m3	A	B	C	E	F	G	H	I	J	K
600	2.33	0.55	750	1600	675	1150	625	150	1500	1425	1275	450
750	3.07	0.66	925	1775	725	1375	650	150	1650	1575	1375	450
900	3.90	0.76	1100	1950	750	1600	675	100	1800	1725	1500	450
1050	5.38	0.92	1275	2125	800	1950	725	75	2025	1950	1650	525
1200	6.58	1.04	1450	2300	850	2175	750	75	2175	2100	1775	525
1350	7.86	1.16	1625	2475	875	2425	775	50	2325	2250	1875	525
1500	9.31	1.29	1800	2650	925	2650	800	25	2475	2400	1975	525
1650	10.89	1.42	1975	2825	950	2875	825	25	2625	2550	2100	525
1800	12.65	1.56	2150	3000	1000	3125	850	0	2775	2700	2200	525

ALL DIMENSIONS SHOWN ARE IN MILLIMETERS OR METERS. WHOLE NUMBERS INDICATE MILLIMETERS; DECIMAL NUMBERS INDICATE METERS UNLESS OTHERWISE NOTED.

NHDOT STANDARD PLANS
MORTAR RUBBLE MASONRY
HEADWALLS WITH 45° WINGS
FOR R.C. PIPE P.C.-8

REV. DATE

PLATE 2
STANDARD HW-1

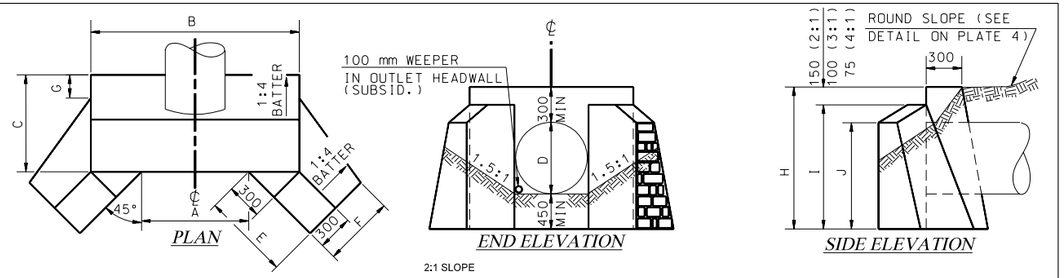

2:1 SLOPE

DIAMETER D (mm)	QUANTITIES PER HEADER M.R.M. m3	QUANTITIES PER HEADER EXC. FOR 100 mm DEPTH m3	A	B	C	E	F	G	H	I	J
600	1.45	0.41	675	1525	650	700	575	175	1350	1200	1050
750	1.94	0.49	825	1675	675	875	575	150	1500	1350	1150
900	2.53	0.57	975	1825	725	1075	600	150	1650	1500	1225
1050	3.19	0.66	1125	1975	750	1250	625	125	1800	1650	1325
1200	4.08	0.75	1300	2150	800	1425	650	100	1950	1800	1400
1500	5.83	0.94	1600	2450	875	1800	700	50	2250	2100	1575
1800	8.10	1.15	1925	2775	950	2150	725	25	2550	2400	1750

3:1 SLOPE

DIAMETER D (mm)	M.R.M. m3	EXC. FOR 100 mm DEPTH m3	A	B	C	E	F	G	H	I	J
600	1.67	0.45	675	1525	650	850	575	175	1350	1250	1125
750	2.25	0.55	825	1675	675	1075	600	150	1500	1400	1225
900	2.91	0.64	975	1825	725	1275	625	150	1650	1550	1325
1050	3.72	0.74	1125	1975	750	1500	650	100	1800	1700	1425
1200	4.62	0.84	1300	2150	800	1700	675	100	1950	1850	1525
1500	6.80	1.06	1600	2450	875	2125	725	75	2250	2150	1725
1800	9.53	1.29	1925	2775	950	2550	775	25	2550	2450	1925

4:1 SLOPE

DIAMETER D (mm)	M.R.M. m3	EXC. FOR 100 mm DEPTH m3	A	B	C	E	F	G	H	I	J
600	1.80	0.48	675	1525	650	950	600	175	1350	1275	1150
750	2.43	0.57	825	1675	675	1175	625	150	1500	1425	1275
900	3.20	0.67	975	1825	725	1400	650	150	1650	1575	1375
1050	4.04	0.77	1125	1975	750	1650	675	100	1800	1725	1500
1200	5.08	0.89	1300	2150	800	1875	700	100	1950	1875	1600
1500	7.48	1.12	1600	2450	875	2325	750	75	2250	2175	1825
1800	11.32	1.47	1925	2775	950	2800	800	25	2550	2475	2025

DIMENSIONS SHOWN ARE TO PAYMENT LINES. MORTAR RUBBLE MASONRY TO BE STEPPED OUTSIDE PAYMENT LINES ON SLOPING FACES.

ALL DIMENSIONS SHOWN ARE IN MILLIMETERS OR METERS. WHOLE NUMBERS INDICATE MILLIMETERS; DECIMAL NUMBERS INDICATE METERS UNLESS OTHERWISE NOTED.

NHDOT STANDARD PLANS
MORTAR RUBBLE MASONRY
HEADWALLS WITH 45° WINGS
FOR PIPES OTHER THAN R.C. P.C.-6

REV. DATE

PLATE 3
STANDARD HW-1

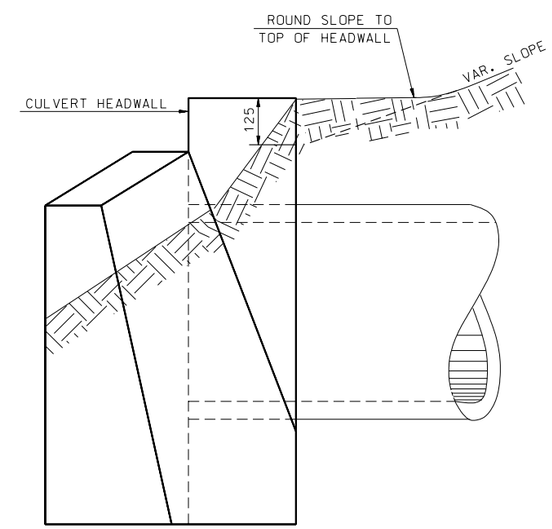

SIDE ELEVATION

ALL DIMENSIONS SHOWN ARE IN MILLIMETERS OR METERS. WHOLE NUMBERS INDICATE MILLIMETERS; DECIMAL NUMBERS INDICATE METERS UNLESS OTHERWISE NOTED.

NHDOT STANDARD PLANS
SLOPE ROUNDING
AT TOP OF CULVERT HEADWALL

REV. DATE

PLATE 4
STANDARD HW-1

STANDARD NO. HW-1

REVISION DATE
7-13-01

*.DGN FILE NAME
HW-1

METRIC STANDARD PLANS

STATE OF NEW HAMPSHIRE
DEPARTMENT OF TRANSPORTATION, CONCORD, N.H.

STANDARD NO. HW-1