STANDARD NO. GR-7

REVISION DATE
7-13-01

*.DGN FILE NAME
GR-7

METRIC STANDARD PLANS

STATE OF NEW HAMPSHIRE
DEPARTMENT OF TRANSPORTATION, CONCORD, N.H.

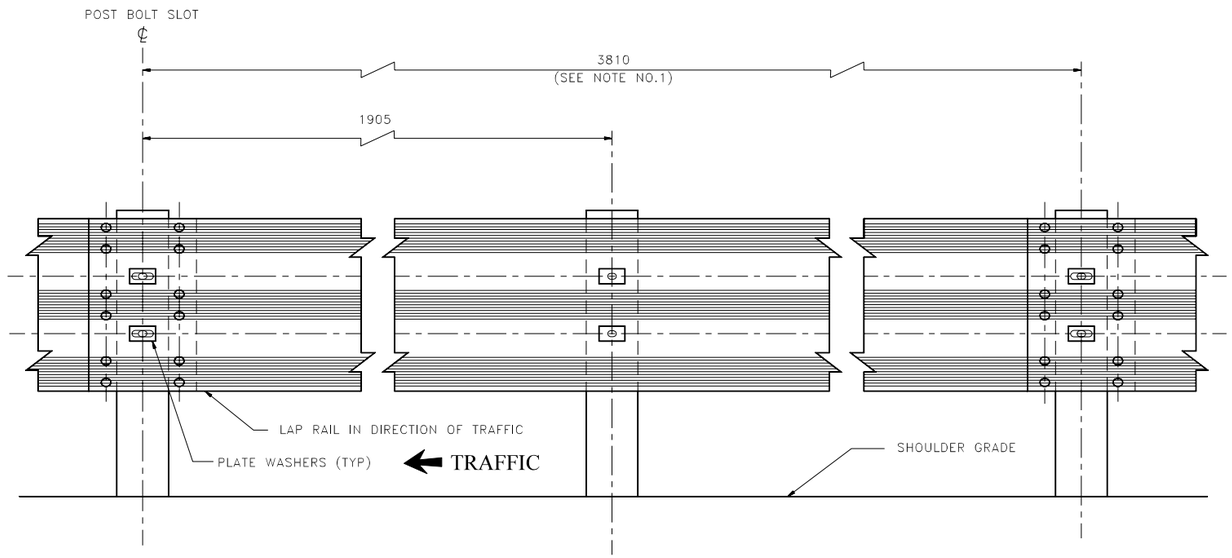

ELEVATION VIEW

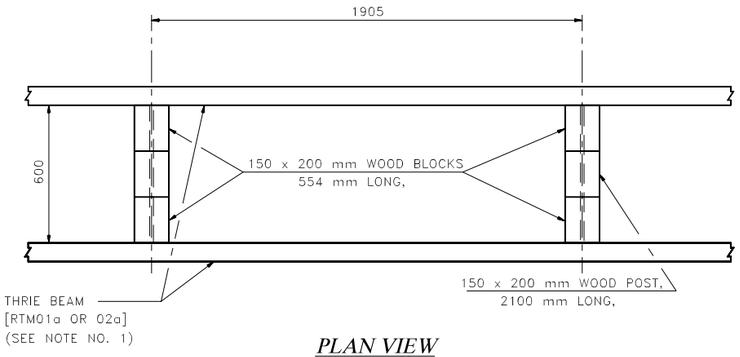

PLAN VIEW

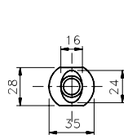

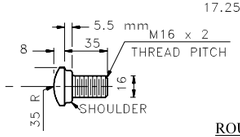

SPLICE BOLT [FBB01]
(12 REQ'D PER SPLICE)

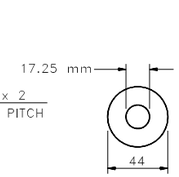

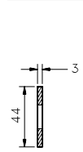

ROUND WASHER FOR M16 BOLT [FWC16a]

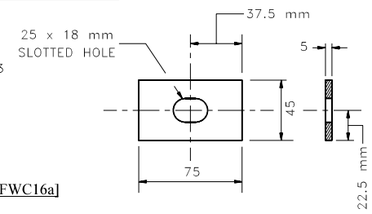

PLATE WASHER [FWR03]

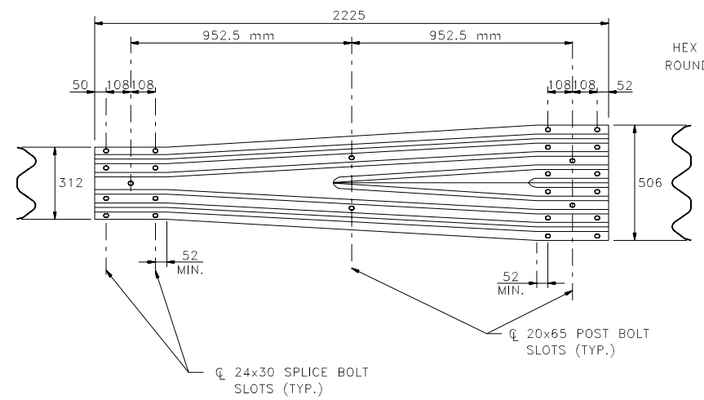

W-THRIE BEAM TRANSITION SECTION
[RWT01a]

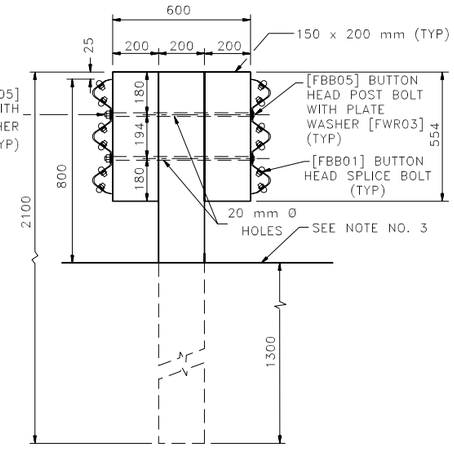

SIDE VIEW AT SPLICE POST

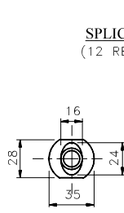

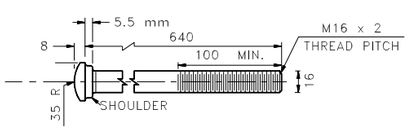

POST BOLT [FBB05]
(2 REQ'D PER POST)

NOTE: LONGER ERECTION BOLTS MAY BE REQUIRED

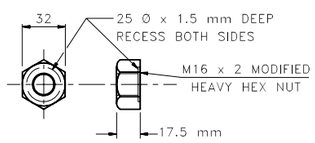

NUT FOR SPLICE & POST BOLTS
[FBB01 & 05]

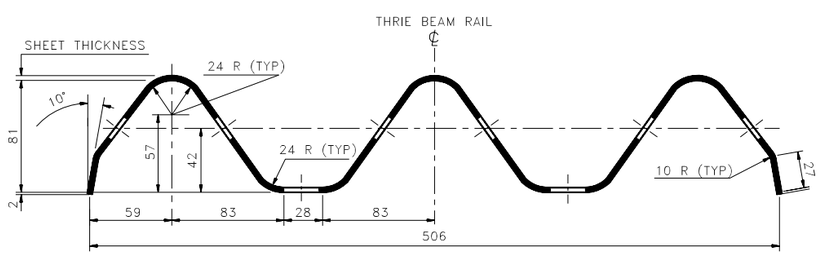

THRIE BEAM RAIL SECTION
[RTM01a & RTM02a]

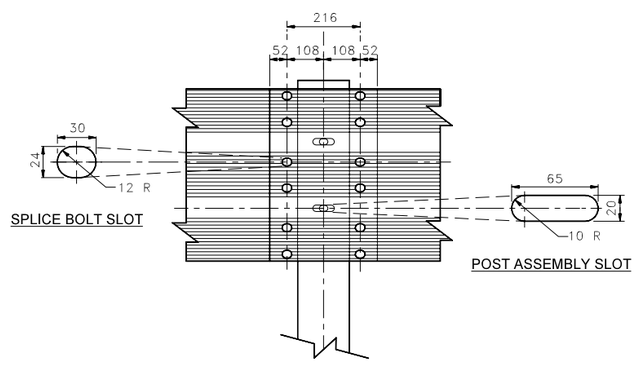

BEAM SPLICE

GENERAL NOTES

1. 7.6 m RAIL PANELS MAY BE USED IN PLACE OF 3.8 m PANELS, EXCEPT ON CURVES WITH A RAIL RADIUS OF LESS THAN 100 m.
2. ALL DIMENSIONS SUBJECT TO MANUFACTURER'S TOLERANCES.
3. GUARDRAIL HEIGHT SHALL BE SET FROM THE GRADE AT THE FACE OF RAIL.
4. DESIGNATIONS PROVIDED IN BRACKETS [ ] RELATE TO STANDARD ELEMENTS DETAILED IN *A GUIDE TO STANDARDIZED HIGHWAY BARRIER HARDWARE*, 1995, AASHTO-AGC-ARTBA JOINT COOPERATIVE COMMITTEE.
5. SEE STD. NO. DL-1 FOR BEAM GUARDRAIL DELINEATORS.
6. ITEM NO.: 606.21403 - DOUBLE-FACED BEAM GUARDRAIL (THRIE BEAM) INCLUDING TRANSITION SECTIONS.

ALL DIMENSIONS SHOWN ARE IN MILLIMETERS OR METERS. WHOLE NUMBERS INDICATE MILLIMETERS; DECIMAL NUMBERS INDICATE METERS UNLESS OTHERWISE NOTED.

GUARDRAIL STANDARD

BEAM GUARDRAIL
THRIE BEAM DOUBLE-FACED

STANDARD NO. GR-7

REVISION DATE
7-13-01

*.DGN FILE NAME
GR-7

METRIC STANDARD PLANS

STATE OF NEW HAMPSHIRE
DEPARTMENT OF TRANSPORTATION, CONCORD, N.H.

STANDARD NO. GR-7