STANDARD NO. GR-6

REVISION DATE
7-13-01

*.DGN FILE NAME
GR-6

METRIC STANDARD PLANS

STATE OF NEW HAMPSHIRE
DEPARTMENT OF TRANSPORTATION, CONCORD, N.H.

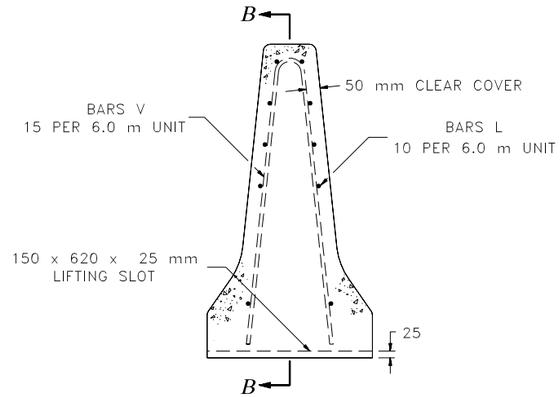

STANDARD BARRIER SECTION A-A

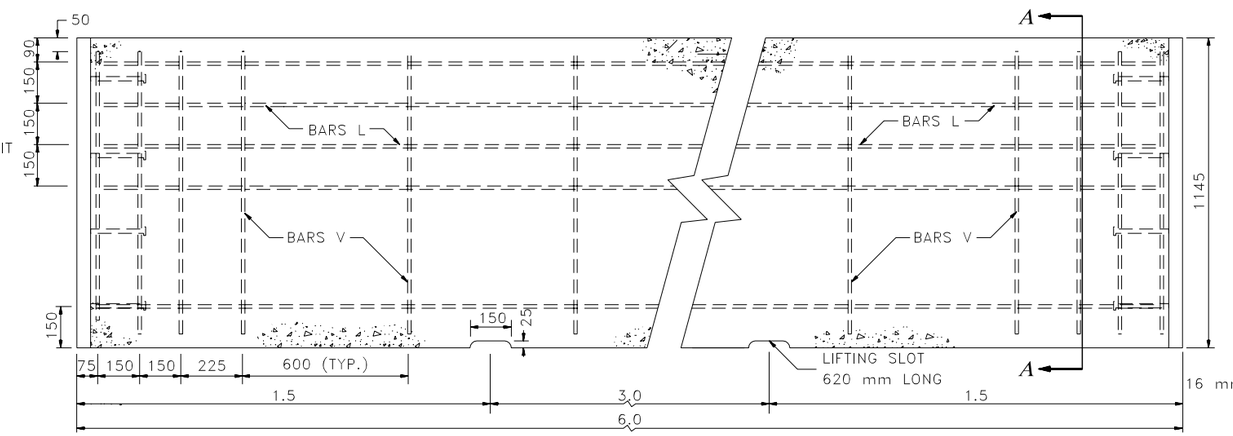

STANDARD BARRIER SECTION B-B

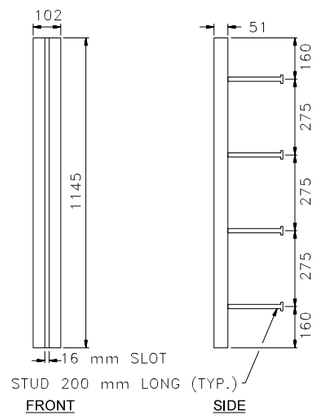

STRUCTURAL TUBE
TS 102 x 51 x 7.9

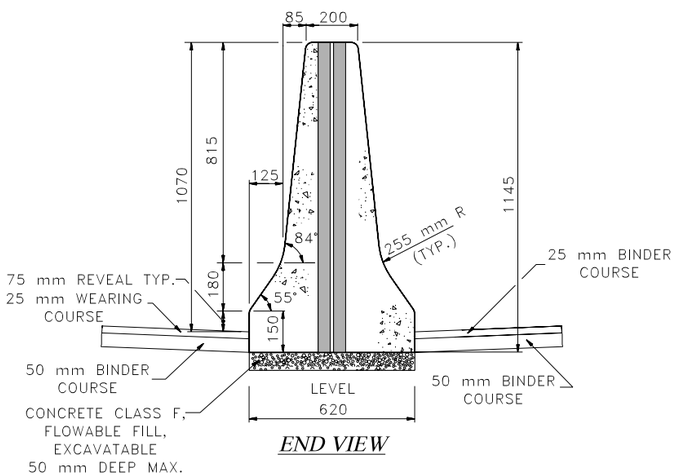

END VIEW

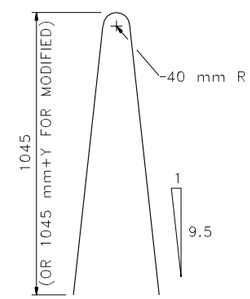

BAR V DETAIL (#13)

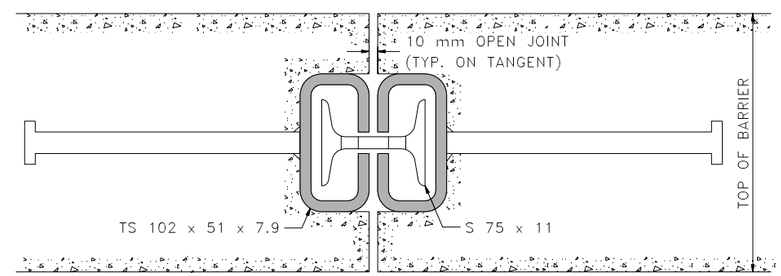

VERTICAL I-BEAM CONNECTION DETAIL

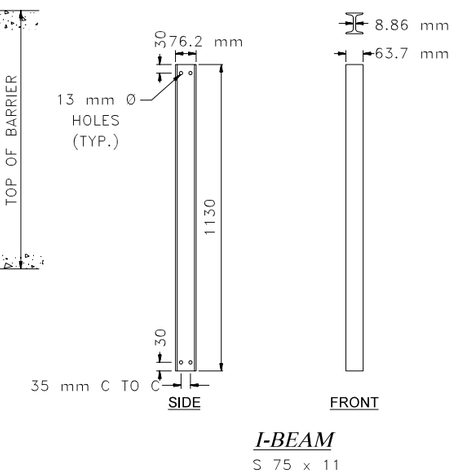

I-BEAM
S 75 x 11

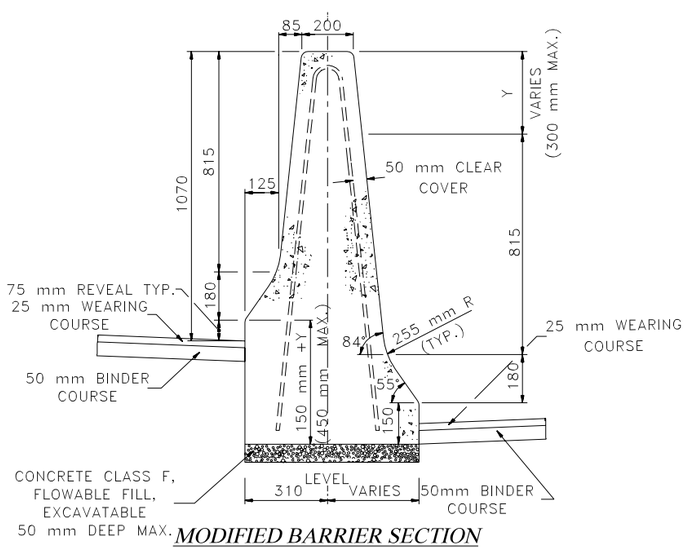

MODIFIED BARRIER SECTION

NOTE: Y=ELEVATION DIFFERENTIAL BETWEEN BARRELS AT FACE OF BARRIER

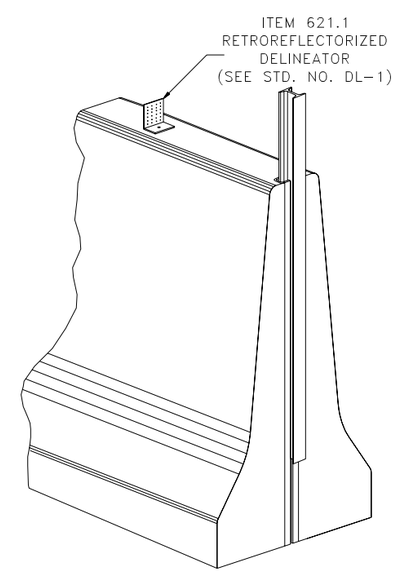

PERSPECTIVE VIEW

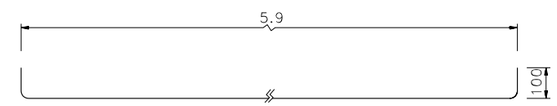

BAR L DETAIL (#13)

GENERAL NOTES

1. THE DIMENSIONS FOR THIS SHAPE CORRESPOND TO THE DESIGNATION SGM10a–b IN *A GUIDE TO STANDARDIZED HIGHWAY BARRIER RAIL HARDWARE*, 1995, AASHTO–AGC–ARTBA JOINT COOPERATIVE COMMITTEE.
2. STANDARD BARRIER IS ITEM NO. 606.412; MODIFIED BARRIER IS ITEM NO. 606.4129.
3. ALL EXPOSED EDGES OF CONCRETE SHALL BE ROUNDED AT A 25 mm RADIUS EXCEPT AS SHOWN.
4. I–BEAMS AND STRUCTURAL TUBES SHALL BE GALVANIZED AFTER FABRICATION.
5. STUD WELDING SHALL BE IN ACCORDANCE WITH ITEM 547.
6. SLOT IN STRUCTURAL TUBE SHALL BE CUT WITH MECHANICALLY GUIDED MEANS TO A SMOOTH, UNIFORM SURFACE MEETING A SURFACE ROUGHNESS OF 25 um OR BETTER (ANSI B46.1).

ALL DIMENSIONS SHOWN ARE IN MILLIMETERS OR METERS. WHOLE NUMBERS INDICATE MILLIMETERS; DECIMAL NUMBERS INDICATE METERS UNLESS OTHERWISE NOTED.

GUARDRAIL STANDARD

PRECAST CONCRETE BARRIER
1070 mm F-SHAPE (DOUBLE-FACED)

STANDARD NO. GR-6

REVISION DATE
7-13-01

*.DGN FILE NAME
GR-6

METRIC STANDARD PLANS

STATE OF NEW HAMPSHIRE
DEPARTMENT OF TRANSPORTATION, CONCORD, N.H.

STANDARD NO. GR-6