STANDARD NO. GR-3B

REVISION DATE
7-13-01

*.DGN FILE NAME
GR-3B

METRIC STANDARD PLANS

STATE OF NEW HAMPSHIRE
DEPARTMENT OF TRANSPORTATION, CONCORD, N.H.

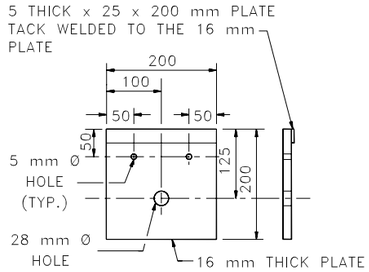

NOTE: ATTACH PLATE TO POST WITH TWO 8d GALVANIZED NAILS

BEARING PLATE
[FPB01]

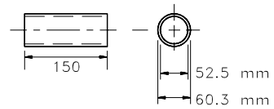

POST SLEEVE
[FMM02]

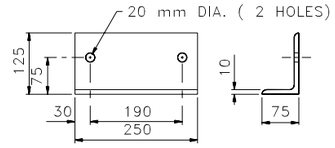

ANGLE

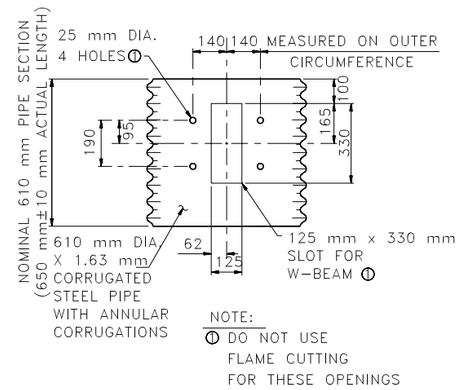

NOTE:
① DO NOT USE FLAME CUTTING FOR THESE OPENINGS

CORRUGATED STEEL PIPE

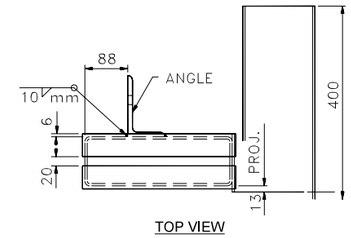

TOP VIEW

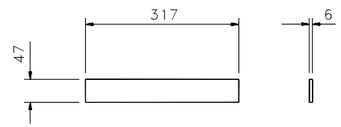

STEEL PLATE
(4 REQUIRED)

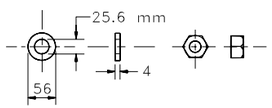

M24 HEX NUT & WASHER
[FNX24a] AND [FWC24a]

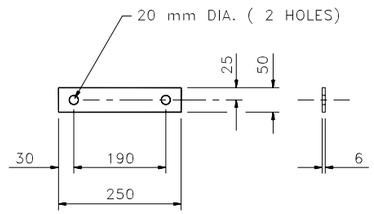

STEEL PLATE WASHER

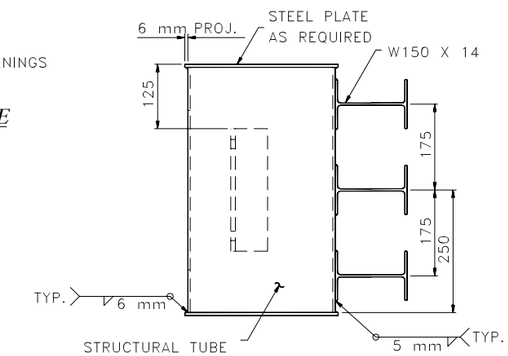

SIDE VIEW

ECCENTRIC LOADER ASSEMBLY

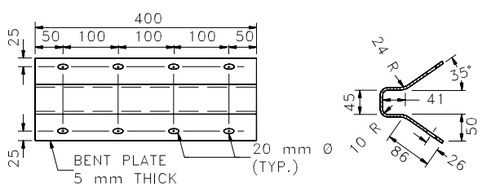

ANCHOR BRACKET
[FPA01]

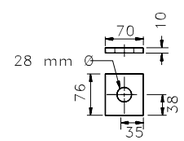

END PLATE
[FPA01]

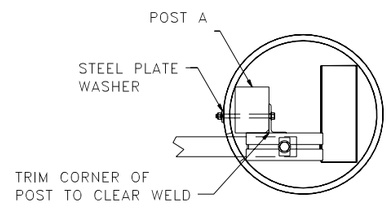

TOP VIEW

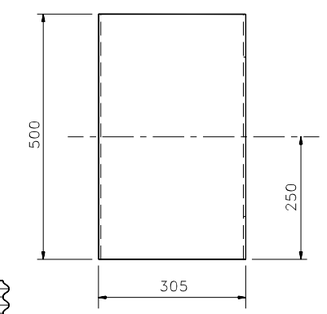

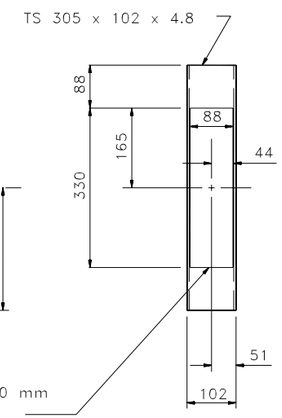

STRUCTURAL TUBE

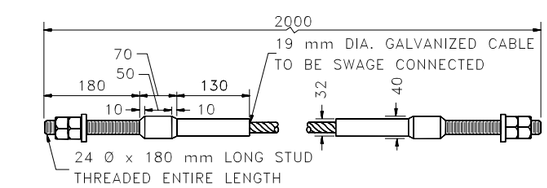

NOTE: TIGHTEN CABLE ASSEMBLY TO TAUT TENSION & DOUBLE-NUT BOTH ENDS

CABLE ASSEMBLY
[FCA01]

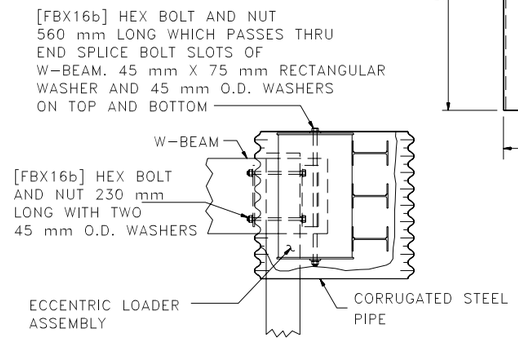

SIDE VIEW

NOSE DETAILS

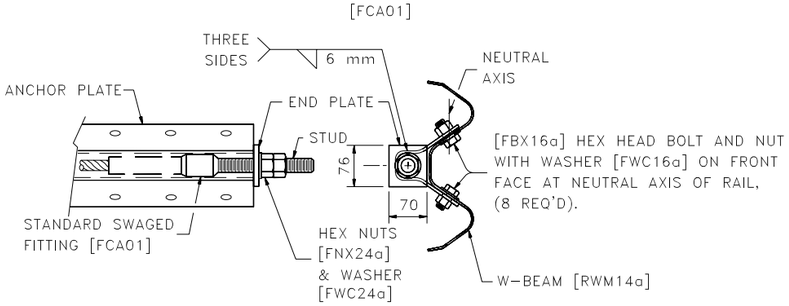

ANCHOR PLATE ASSEMBLY DETAILS

GENERAL NOTES

1. ALL DIMENSIONS SUBJECT TO MANUFACTURER'S TOLERANCES.
2. DESIGNATIONS PROVIDED IN BRACKETS [ ] RELATE TO STANDARD ELEMENTS IN *A GUIDE TO STANDARDIZED HIGHWAY BARRIER HARDWARE*, 1995, AASHTO-AGC-ARTBA JOINT COOPERATIVE COMMITTEE.

ALL DIMENSIONS SHOWN ARE IN MILLIMETERS OR METERS. WHOLE NUMBERS INDICATE MILLIMETERS; DECIMAL NUMBERS INDICATE METERS UNLESS OTHERWISE NOTED.

GUARDRAIL STANDARD

BEAM GUARDRAIL TERMINAL UNIT TYPE ELT HARDWARE DETAILS

STANDARD NO. GR-3B

REVISION DATE
7-13-01

*.DGN FILE NAME
GR-3B

METRIC STANDARD PLANS

STATE OF NEW HAMPSHIRE
DEPARTMENT OF TRANSPORTATION, CONCORD, N.H.

STANDARD NO. GR-3B