STANDARD NO. DR-3

REVISION DATE
7-13-01

*.DGN FILE NAME
DR-3

METRIC STANDARD PLANS

STATE OF NEW HAMPSHIRE
DEPARTMENT OF TRANSPORTATION, CONCORD, N.H.

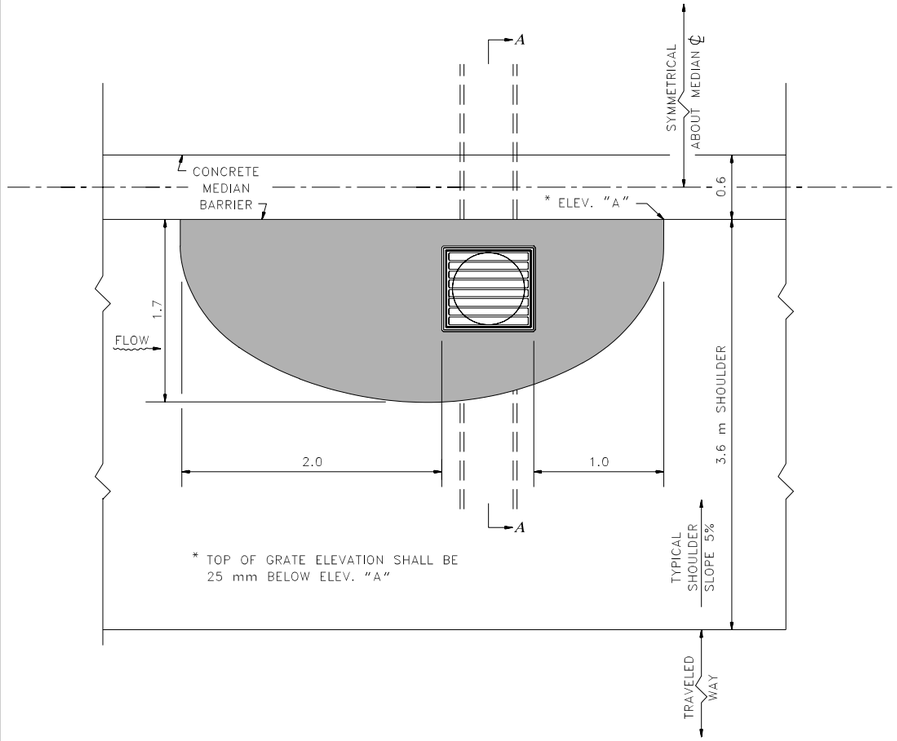

PLAN

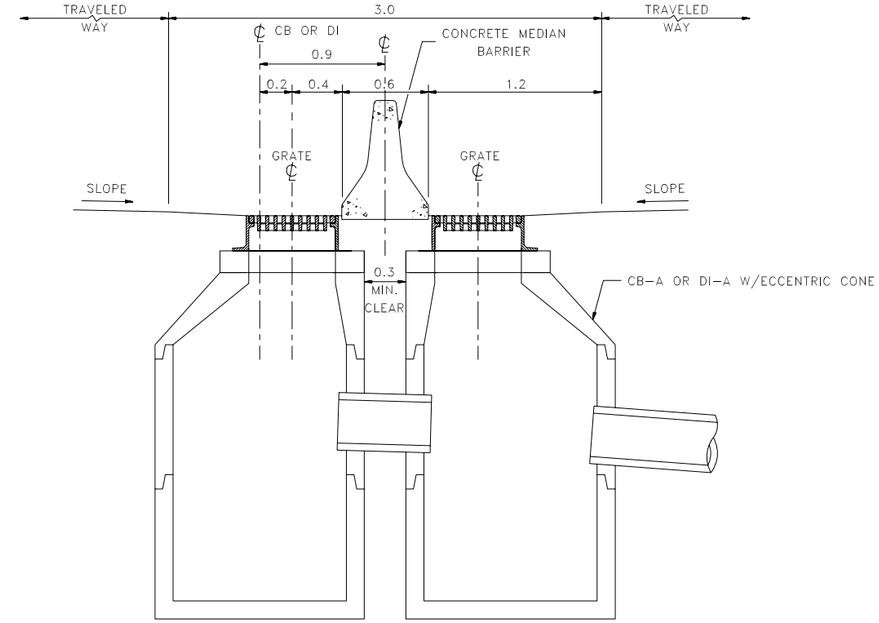

3.0 m WIDE MEDIAN DRAINAGE DETAILS

(OR ALTERNATE DESIGN FOR SPECIAL CONDITIONS)

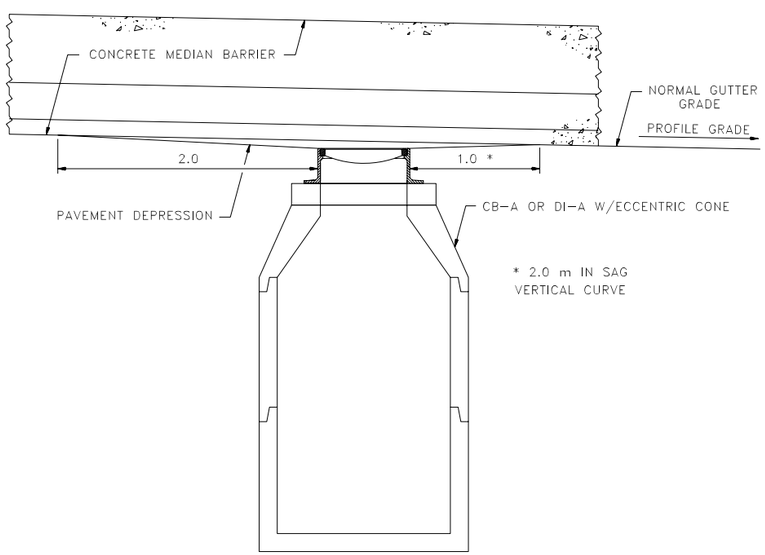

ELEVATION

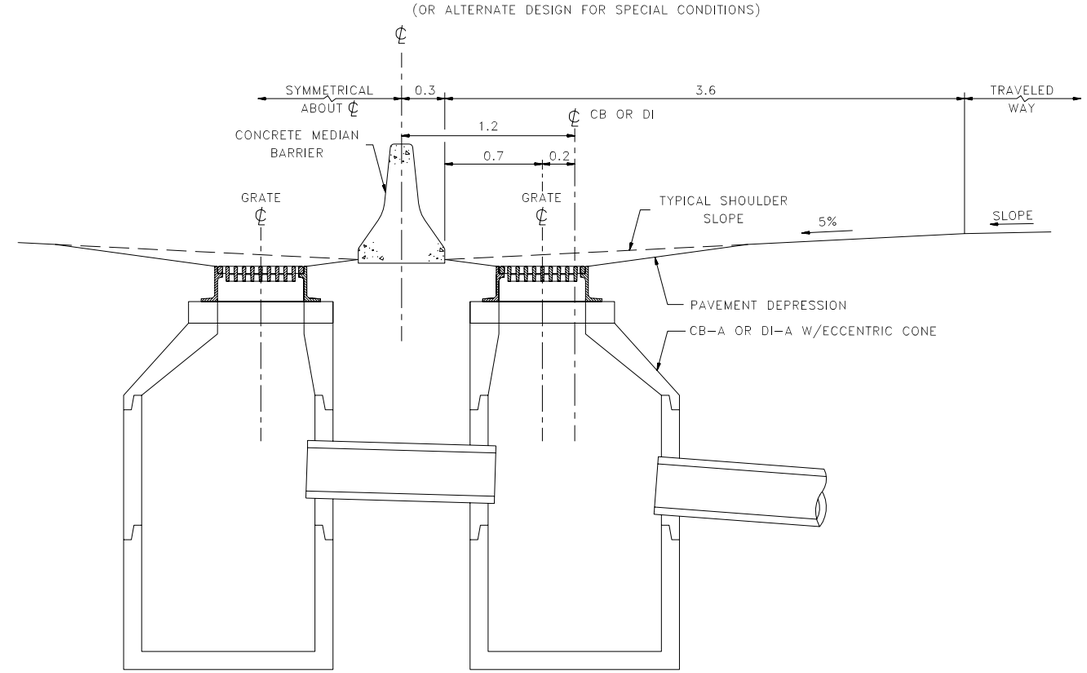

SECTION A-A

7.8 m WIDE MEDIAN DRAINAGE DETAILS

ALL DIMENSIONS SHOWN ARE IN MILLIMETERS OR METERS. WHOLE NUMBERS INDICATE MILLIMETERS; DECIMAL NUMBERS INDICATE METERS UNLESS OTHERWISE NOTED.

DRAINAGE STANDARD

CONCRETE MEDIAN BARRIER DRAINAGE DETAILS

STANDARD NO. DR-3

REVISION DATE
7-13-01

*.DGN FILE NAME
DR-3

METRIC STANDARD PLANS

STATE OF NEW HAMPSHIRE
DEPARTMENT OF TRANSPORTATION, CONCORD, N.H.

STANDARD NO. DR-3