STANDARD NO. DR-2

REVISION DATE
7-13-01

*.DGN FILE NAME
DR-2

METRIC STANDARD PLANS

STATE OF NEW HAMPSHIRE
DEPARTMENT OF TRANSPORTATION, CONCORD, N.H.

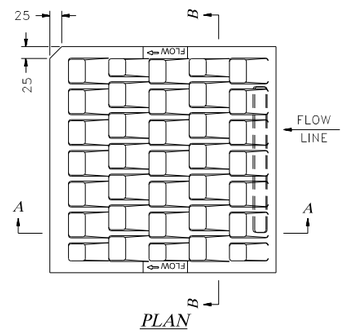

PLAN

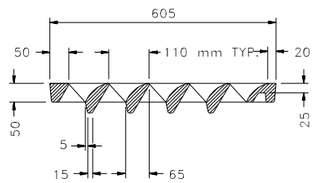

SECTION A-A

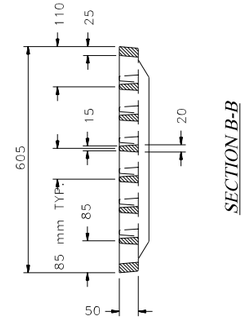

SECTION B-B

GENERAL NOTES

1. ALL DIMENSIONS ARE NOMINAL
2. USE WITH TYPE "A" FRAME
3. FREE OPEN AREA = 0.14 m^2
4. TO BE USED ON STEEP GRADES WHERE HIGH CAPACITY IS NEEDED AND BICYCLE TRAFFIC IS ANTICIPATED.

ALL DIMENSIONS SHOWN ARE IN MILLIMETERS OR METERS. WHOLE NUMBERS INDICATE MILLIMETERS; DECIMAL NUMBERS INDICATE METERS UNLESS OTHERWISE NOTED.

NHDOT STANDARD PLANS
TYPE "F" GRATE

REV. DATE

PLATE 1
STANDARD DR-2

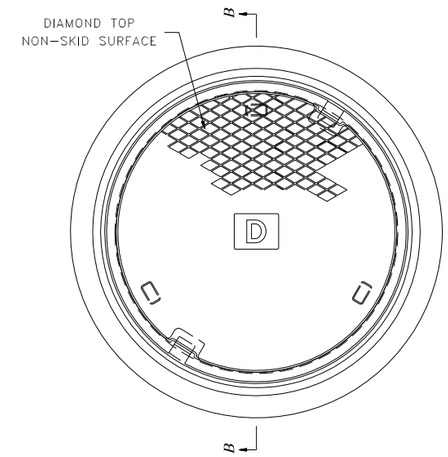

PLAN

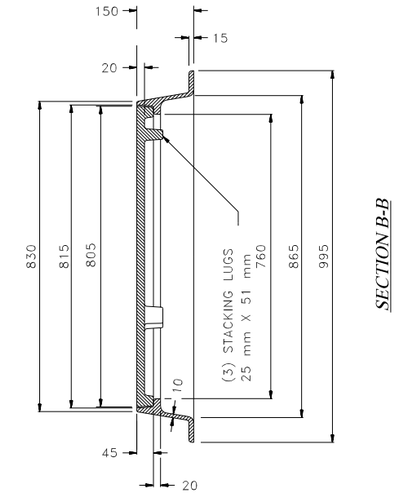

SECTION B-B

GENERAL NOTES

1. ALL DIMENSIONS ARE NOMINAL
2. 75 mm HIGH LETTER ("D", "E", "S", OR "T" CORRESPONDING TO THE UTILITY) IN THE CENTER OF THE COVER.

ALL DIMENSIONS SHOWN ARE IN MILLIMETERS OR METERS. WHOLE NUMBERS INDICATE MILLIMETERS; DECIMAL NUMBERS INDICATE METERS UNLESS OTHERWISE NOTED.

NHDOT STANDARD PLANS
MANHOLE COVER & FRAME

REV. DATE

PLATE 2
STANDARD DR-2

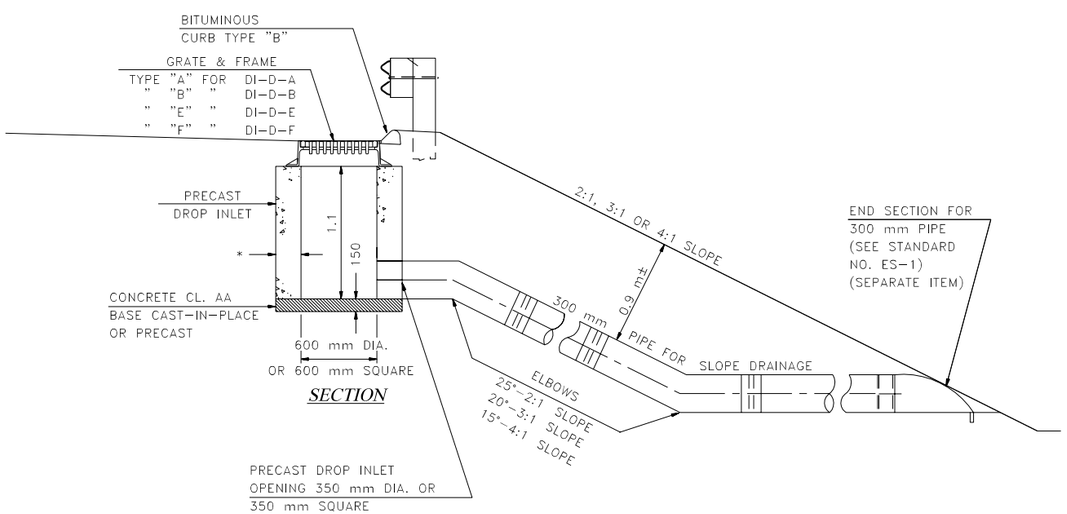

* 200 mm UNREINFORCED; 125 mm REINFORCED

ITEM NO.: 604.24X

ALL DIMENSIONS SHOWN ARE IN MILLIMETERS OR METERS. WHOLE NUMBERS INDICATE MILLIMETERS; DECIMAL NUMBERS INDICATE METERS UNLESS OTHERWISE NOTED.

NHDOT STANDARD PLANS
DROP INLET TYPE D &
PIPE FOR SLOPE DRAINAGE

REV. DATE

PLATE 3
STANDARD DR-2

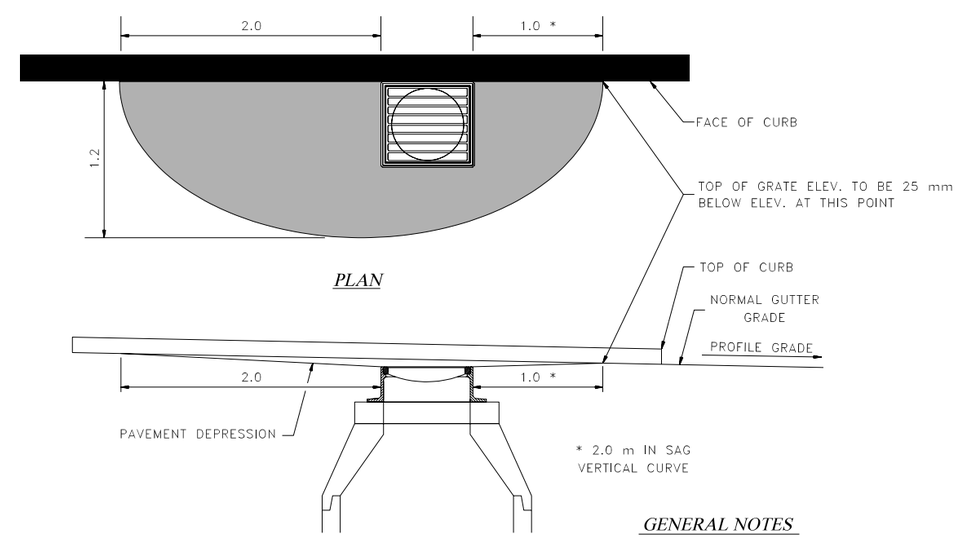

PLAN

ELEVATION

GENERAL NOTES

1. SHADED AREA REPRESENTS APPROXIMATE LIMITS OF PAVEMENT DEPRESSION

ALL DIMENSIONS SHOWN ARE IN MILLIMETERS OR METERS. WHOLE NUMBERS INDICATE MILLIMETERS; DECIMAL NUMBERS INDICATE METERS UNLESS OTHERWISE NOTED.

NHDOT STANDARD PLANS
PAVEMENT DEPRESSION DETAIL

REV. DATE

PLATE 4
STANDARD DR-2

STANDARD NO. DR-2

REVISION DATE
7-13-01

*.DGN FILE NAME
DR-2

METRIC STANDARD PLANS

STATE OF NEW HAMPSHIRE
DEPARTMENT OF TRANSPORTATION, CONCORD, N.H.

STANDARD NO. DR-2