STANDARD NO. CR-2

REVISION DATE

*.DGN FILE NAME
CR-2

METRIC
STANDARD PLANS

STATE OF NEW HAMPSHIRE
DEPARTMENT OF TRANSPORTATION, CONCORD, N.H.

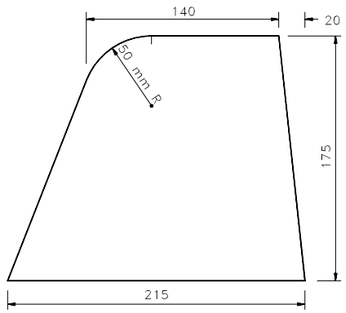

TYPE 'A'

ITEM NO. 609.812
NOTE: TO BE USED ONLY WHEN CALLED FOR ON PLANS

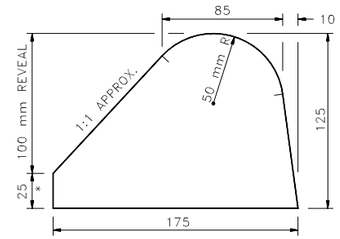

* MATCH WEARING COURSE PAVEMENT TO 25 mm FACE

TYPE 'B' (100 mm REVEAL)

ITEM NO. 609.811
NOTE: NORMALLY USED UNDER GUARDRAIL. SEE PLATE 2 FOR PLACEMENT DETAIL.

ALL DIMENSIONS SHOWN ARE IN MILLIMETERS OR METERS. WHOLE NUMBERS INDICATE MILLIMETERS; DECIMAL NUMBERS INDICATE METERS UNLESS OTHERWISE NOTED.

NHDOT STANDARD PLANS

BITUMINOUS CURB

REV. DATE

PLATE 1

STANDARD CR-2

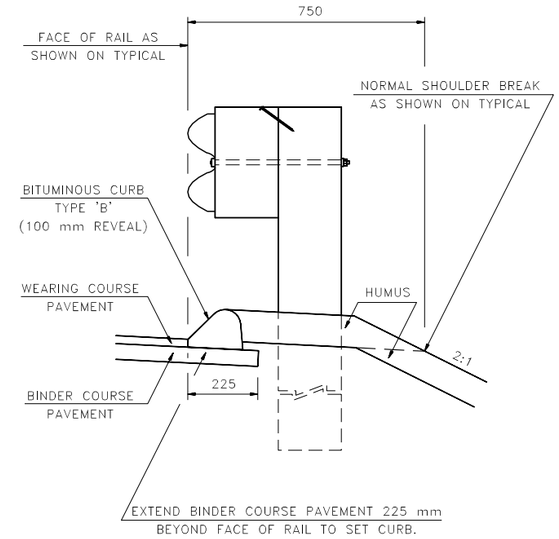

ALL DIMENSIONS SHOWN ARE IN MILLIMETERS OR METERS. WHOLE NUMBERS INDICATE MILLIMETERS; DECIMAL NUMBERS INDICATE METERS UNLESS OTHERWISE NOTED.

NHDOT STANDARD PLANS

BITUMINOUS CURB PLACEMENT UNDER BEAM GUARDRAIL

REV. DATE

PLATE 2

STANDARD CR-2

ALL DIMENSIONS SHOWN ARE IN MILLIMETERS OR METERS. WHOLE NUMBERS INDICATE MILLIMETERS; DECIMAL NUMBERS INDICATE METERS UNLESS OTHERWISE NOTED.

NHDOT STANDARD PLANS

REV. DATE

PLATE

STANDARD

ALL DIMENSIONS SHOWN ARE IN MILLIMETERS OR METERS. WHOLE NUMBERS INDICATE MILLIMETERS; DECIMAL NUMBERS INDICATE METERS UNLESS OTHERWISE NOTED.

NHDOT STANDARD PLANS

REV. DATE

PLATE

STANDARD

STANDARD NO. CR-2

REVISION DATE

*.DGN FILE NAME
CR-2

METRIC
STANDARD PLANS

STATE OF NEW HAMPSHIRE
DEPARTMENT OF TRANSPORTATION, CONCORD, N.H.

STANDARD NO. CR-2