DELINEATOR SPACING

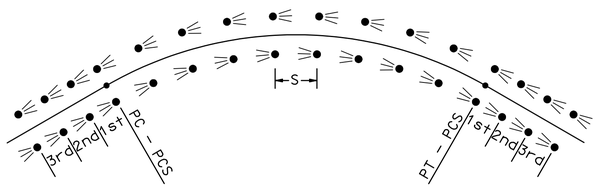

POST MOUNTED SPACING FOR HORIZONTAL CURVES

(SEE STD. NO. DL-2 FOR RAMPS AND LOOPS)

RADIUS OF CURVE (ft)	SPACING ON CURVE = S (ft)
OVER 7000	264
5501 - 7000	225
4001 - 5500	200
2901 - 4000	175
2101 - 2900	150
1501 - 2100	125
1151 - 1500	100
<1150	*

* SEE BEAM GUARDRAIL DELINEATOR SPACING

SPACING MAY BE COMPUTED BY THE FORMULA $S=3\sqrt{R-50}$. THE MINIMUM SPACING SHALL BE 20 FEET, WITH THE MAXIMUM NOT TO EXCEED 264 FEET. THE SPACING OF THE FIRST DELINEATOR BEYOND A CURVE IS 2S, THE SECOND IS 3S, AND THE THIRD IS 6S BUT NOT TO EXCEED 264 FEET.

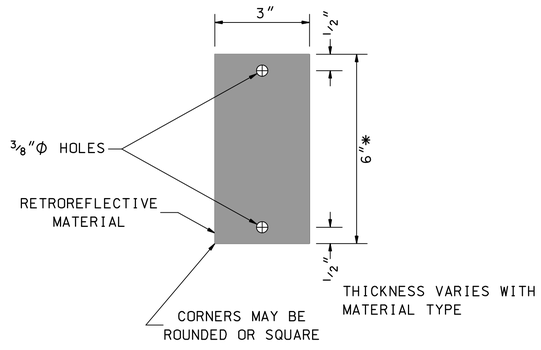

* 12" SINGLE PIECE MAY BE USED FOR DOUBLE DELINEATOR

RETROREFLECTIVE DELINEATOR

(ITEM 621.3X, 621.4)

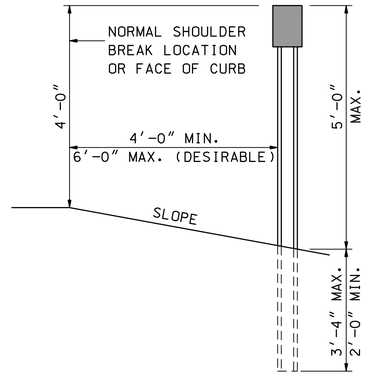

TYPICAL INSTALLATION

(ITEM 621.31)

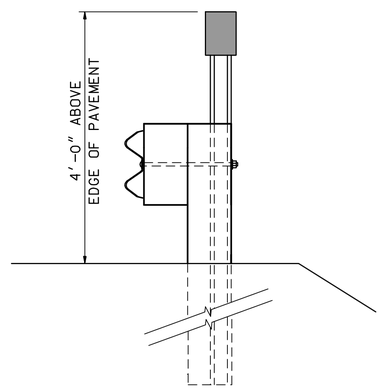

DELINEATOR WITHIN GUARDRAIL SECTION

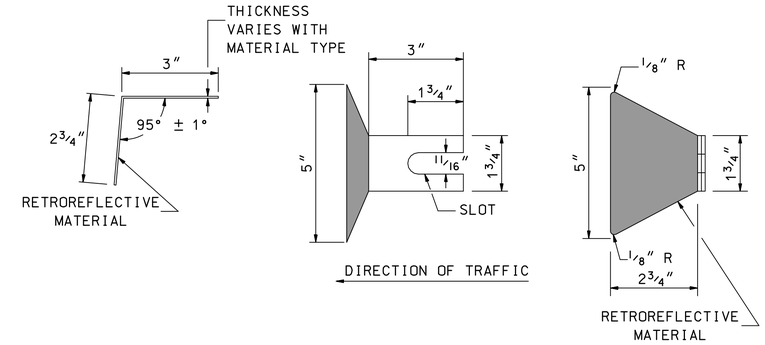

RETROREFLECTIVE BEAM GUARDRAIL DELINEATOR

(ITEM 621.2)

SPACING FOR BEAM GUARDRAIL DELINEATORS SHALL BE 25' MINIMUM AND 100' MAXIMUM	
RADIUS OF CURVE (IN FEET)	ADJUSTED FOR POST SPACING (IN FEET)
50	25
150	25
200	37 1/2
250	37 1/2
300	50
400	50
500	62 1/2
600	62 1/2
700	75
800	75
900	87 1/2
1000	87 1/2

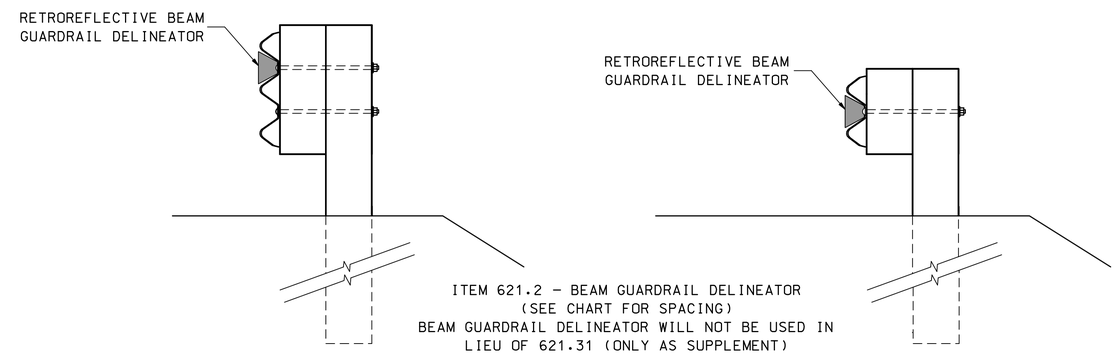

ITEM 621.2 - BEAM GUARDRAIL DELINEATOR
(SEE CHART FOR SPACING)
BEAM GUARDRAIL DELINEATOR WILL NOT BE USED IN LIEU OF 621.31 (ONLY AS SUPPLEMENT)

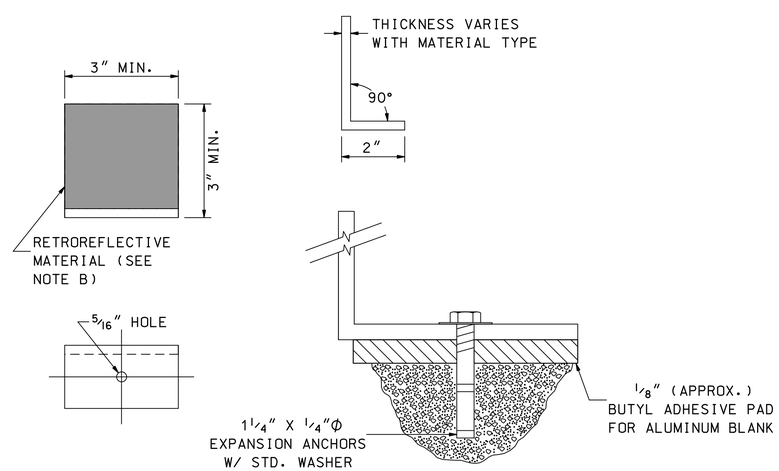

RETROREFLECTIVE CONCRETE MEDIAN BARRIER DELINEATOR

(ITEM 621.1)

GENERAL NOTES

1. UNLESS OTHERWISE ORDERED, DELINEATORS SHALL BE MOUNTED ALONG THE RIGHT SIDE OF ALL ROADWAYS (SEE TYPICAL). DELINEATORS MAY ALSO BE USED ON THE LEFT SIDE OF DIVIDED HIGHWAYS WHERE NEEDED FOR CLEAR INDICATION OF THE ALIGNMENT.
2. DELINEATORS LOCATED BEHIND GUARDRAIL SHALL BE INSTALLED SO THAT THE DELINEATOR POST IS ADJACENT TO THE TRAILING EDGE OF THE NEAREST GUARDRAIL POST.
3. WHEN DELINEATION IS USED ONLY ON CURVES, THREE DELINEATORS SHALL BE PLACED BEFORE AND AFTER THE CIRCULAR PORTION OF THE CURVE.
4. WHEN DELINEATION IS USED ON TANGENTS, THE SPACING SHALL BE 264 FEET. THE TANGENT SPACING SHALL BEGIN BEYOND THE SPACING REQUIREMENTS FOR CURVES.
5. DELINEATOR COLORS SHALL IN ALL CASES CONFORM TO THE COLOR OF THE EDGELINES.
6. DELINEATORS WILL NOT BE PLACED BEHIND SIDEWALK.

GENERAL NOTES

A. THIS DELINEATOR IS TO BE PLACED ON TOP OF CONCRETE BARRIER.

B. IF GLARE SCREEN IS PLACED ON TOP OF THE CONCRETE BARRIER, THEN DELINEATORS ARE ATTACHED TO EITHER SIDE OF THE BARRIER AND DO NOT NEED TO BE RETRO-REFLECTORIZED ON BOTH SIDES.

C. YELLOW DELINEATOR FOR MEDIAN BARRIERS SHALL BE LOCATED ON THE LEFT SIDE OF THE ROADWAY FACING TRAFFIC IN BOTH DIRECTIONS, BEGINNING AT THE FIRST FULL HEIGHT OF THE CONCRETE MEDIAN BARRIER AND SPACED ACCORDING TO CHART FOR BEAM GUARDRAIL DELINEATORS.

DELINEATION STANDARD

ROADSIDE DELINEATION

STANDARD NO. DL-1

REVISION DATE
07-13-2001
06-16-2010

*.DGN FILE NAME
DL-1

STANDARD PLANS

New Hampshire DOT Department of Transportation

STANDARD NO. DL-1