ALTERNATIVE PLATFORM FOR ENERGY ABSORBING GUARDRAIL TERMINAL (EAGRT)

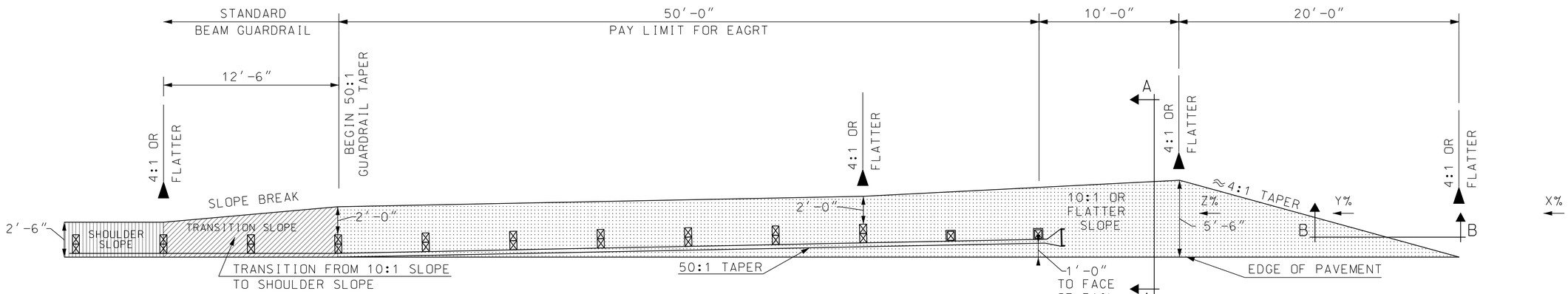

50' EAGRT UNIT

X: LONGITUDINAL GRADE OF ROADWAY SLOPE IN ADVANCE OF PLATFORM
Y: LONGITUDINAL GRADE OF PLATFORM APPROACH
Z: LONGITUDINAL GRADE OF PLATFORM

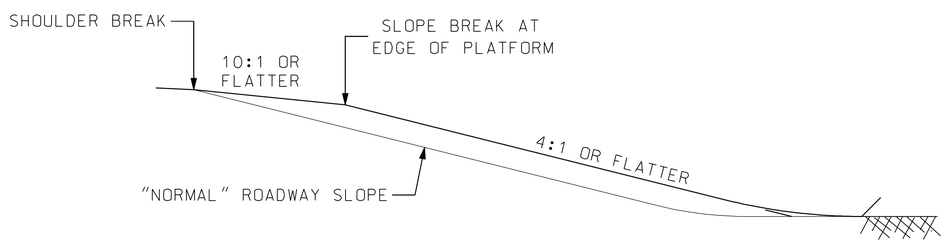

SECTION A-A
PLATFORM SLOPE GRADING

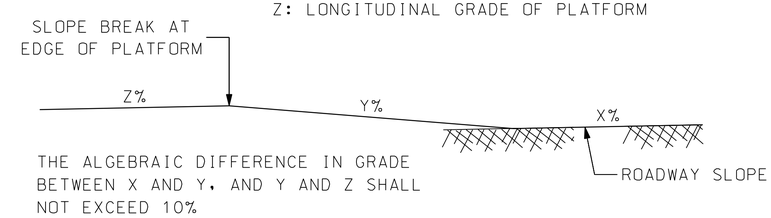

SECTION B-B
PLATFORM APPROACH GRADING

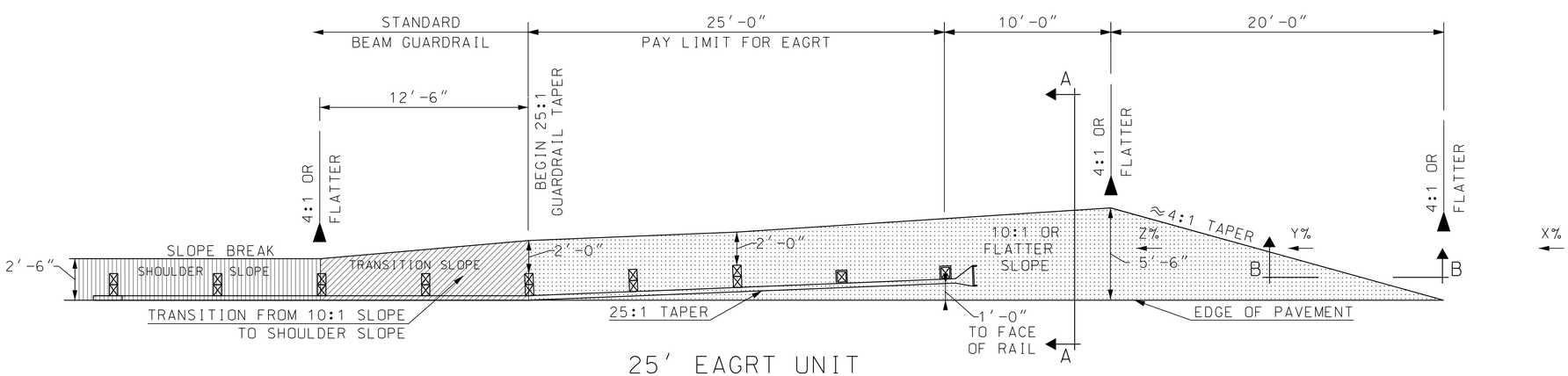

25' EAGRT UNIT

REVISION DATES	STATE OF NEW HAMPSHIRE			
6-7-05	DEPARTMENT OF TRANSPORTATION ∘ BUREAU OF HIGHWAY DESIGN			
	EAGRT ALTERNATIVE PLATFORM GRADING			
	DGN	STATE PROJECT NO.	SHEET NO.	TOTAL SHEETS
	EAGRT	N≤A		