TRAFFIC SIGNAL MAST ARM FOUNDATION - TYPE 1D

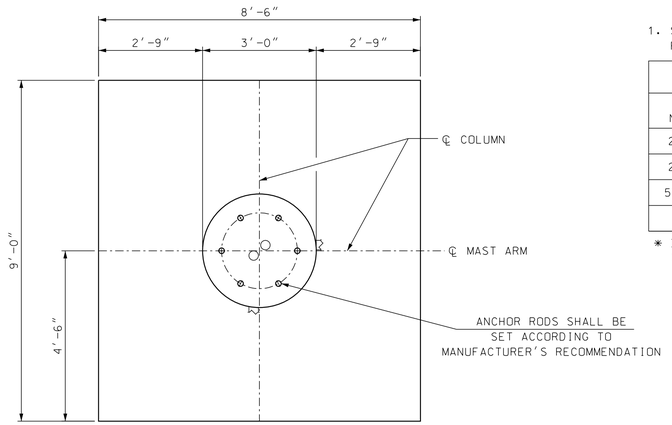

PLAN VIEW

NOTES

1. SEE MAST ARM FOUNDATION - TYPE 1A SPECIAL DETAIL, FOR TYPE 1 FOUNDATION NOTES.

TYPICAL QUANTITIES PER BASE		
ITEM NUMBER	ITEM	QUANTITY
206.1*	COMMON STRUCTURE EXCAVATION	28 CY
209.1*	GRANULAR BACKFILL	21.3 CY
520.21*	CONCRETE CLASS B, FOOTINGS	6.9 CY
544*	REINFORCING STEEL	610 LB

* ITEM NUMBERS ARE FOR SPECIFICATION REFERENCE ONLY. NO SEPARATE PAYMENT WILL BE MADE FOR THESE ITEMS.

TYPE 1D REINFORCING SCHEDULE

MARK	SIZE	NO.	UNBENT LENGTH	TYPE
D1	#4	9	8'-6"	—
D2	#5	9	8'-6"	—
D3	#4	9	8'-0"	—
D4	#5	9	8'-0"	—
D5	#7	16	7'-4"	L
D6	#5	12	9'-3"	Q

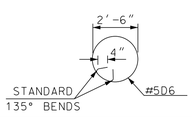

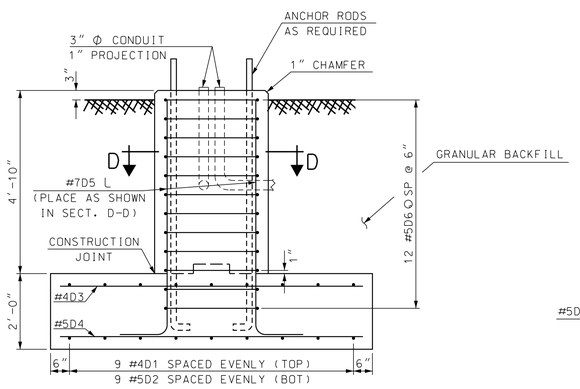

ELEVATION VIEW

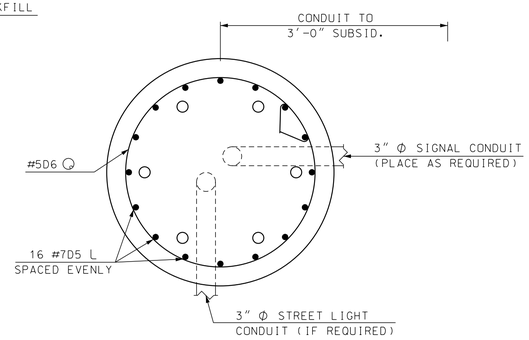

SECTION D-D

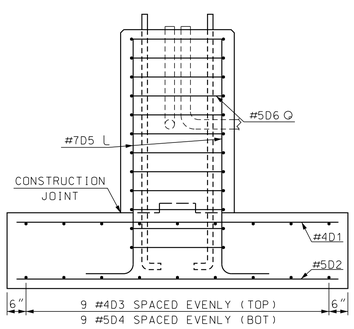

END ELEVATION VIEW

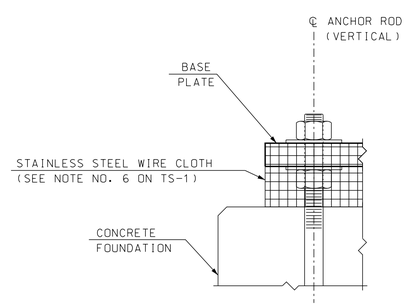

SCREEN DETAIL

TRAFFIC SIGNAL MAST ARM FOUNDATION - TYPE 1E

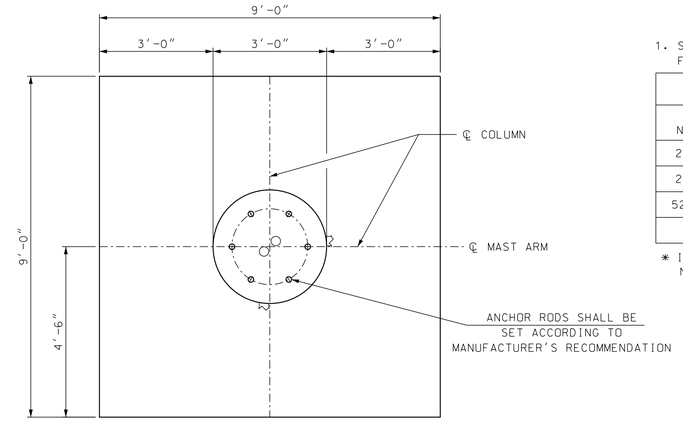

PLAN VIEW

NOTES

1. SEE MAST ARM FOUNDATION - TYPE 1A SPECIAL DETAIL, FOR TYPE 1 FOUNDATION NOTES.

TYPICAL QUANTITIES PER BASE		
ITEM NUMBER	ITEM	QUANTITY
206.1*	COMMON STRUCTURE EXCAVATION	32 CY
209.1*	GRANULAR BACKFILL	24.4 CY
520.21*	CONCRETE CLASS B, FOOTINGS	7.4 CY
544*	REINFORCING STEEL	714 LB

* ITEM NUMBERS ARE FOR SPECIFICATION REFERENCE ONLY. NO SEPARATE PAYMENT WILL BE MADE FOR THESE ITEMS.

TYPE 1E REINFORCING SCHEDULE

MARK	SIZE	NO.	UNBENT LENGTH	TYPE
E1	#4	18	8'-6"	—
E2	#6	18	8'-6"	—
E3	#7	16	7'-10"	L
E4	#5	13	9'-3"	Q

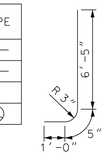

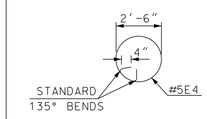

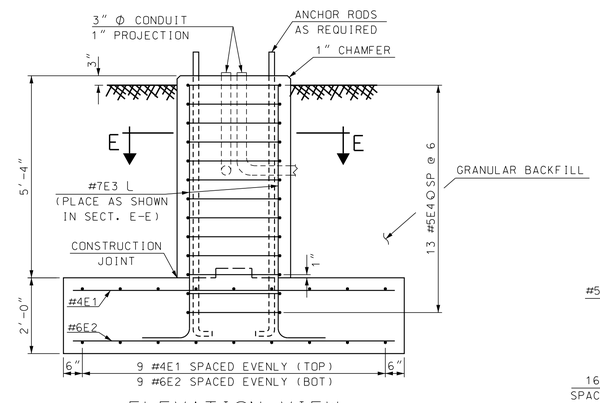

ELEVATION VIEW

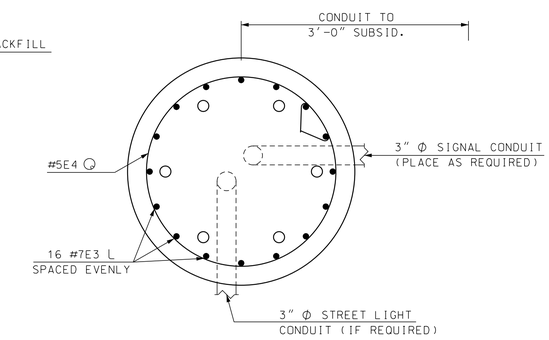

SECTION E-E

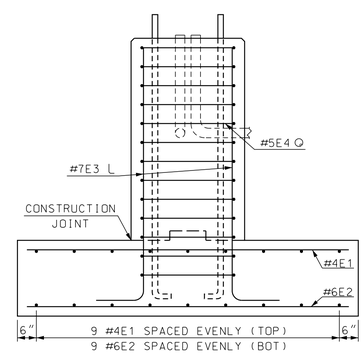

END ELEVATION VIEW

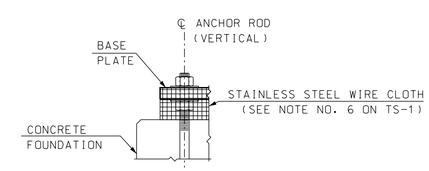

SCREEN DETAIL

REVISIONS AFTER PROPOSAL			
NUMBER	DATE	STATION	DESCRIPTION

SDR PROCESSED	KFD	DATE	01/15/2016
NEW DESIGN		DATE	DATE3
SHEET CHECKED	NAME3	DATE	
AS BUILT DETAILS		DATE	

STATE OF NEW HAMPSHIRE

DEPARTMENT OF TRANSPORTATION • BUREAU OF TRAFFIC

Traffic Signal Mast Arm Foundations - Type 1D & 1E

REVISION DATE	DGN	STATE PROJECT NO.	SHEET NO.	TOTAL SHEETS
05-06-16	2016_ma_fd_1d&e	40405	X	