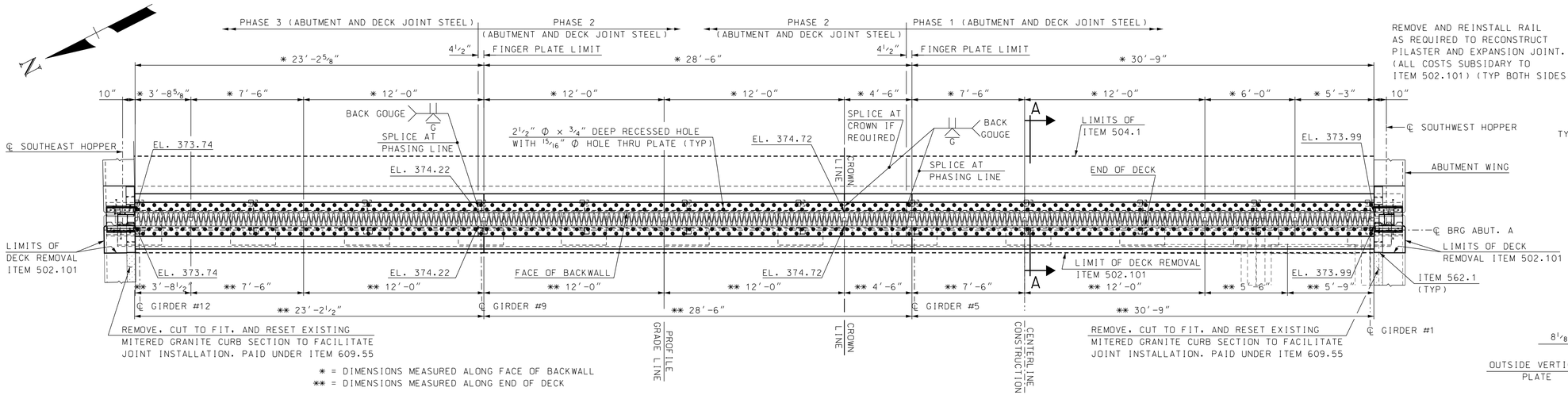

PLAN VIEW - ABUTMENT A

SCALE: 1/4" = 1'-0"

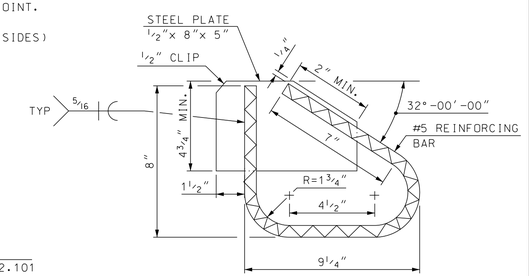

ANCHORAGE DETAIL

SCALE: 3" = 1'-0"

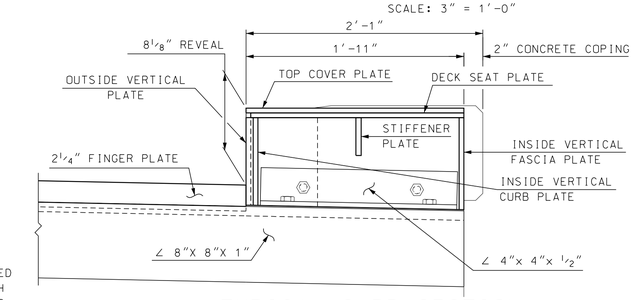

TYPICAL CURB SECTION

SCALE: 1 1/2" = 1'-0"

NOTE: DETAILS AND NOTES MAY NOT BE CURRENT. CLOSELY REVIEW BEFORE USING DETAILS.

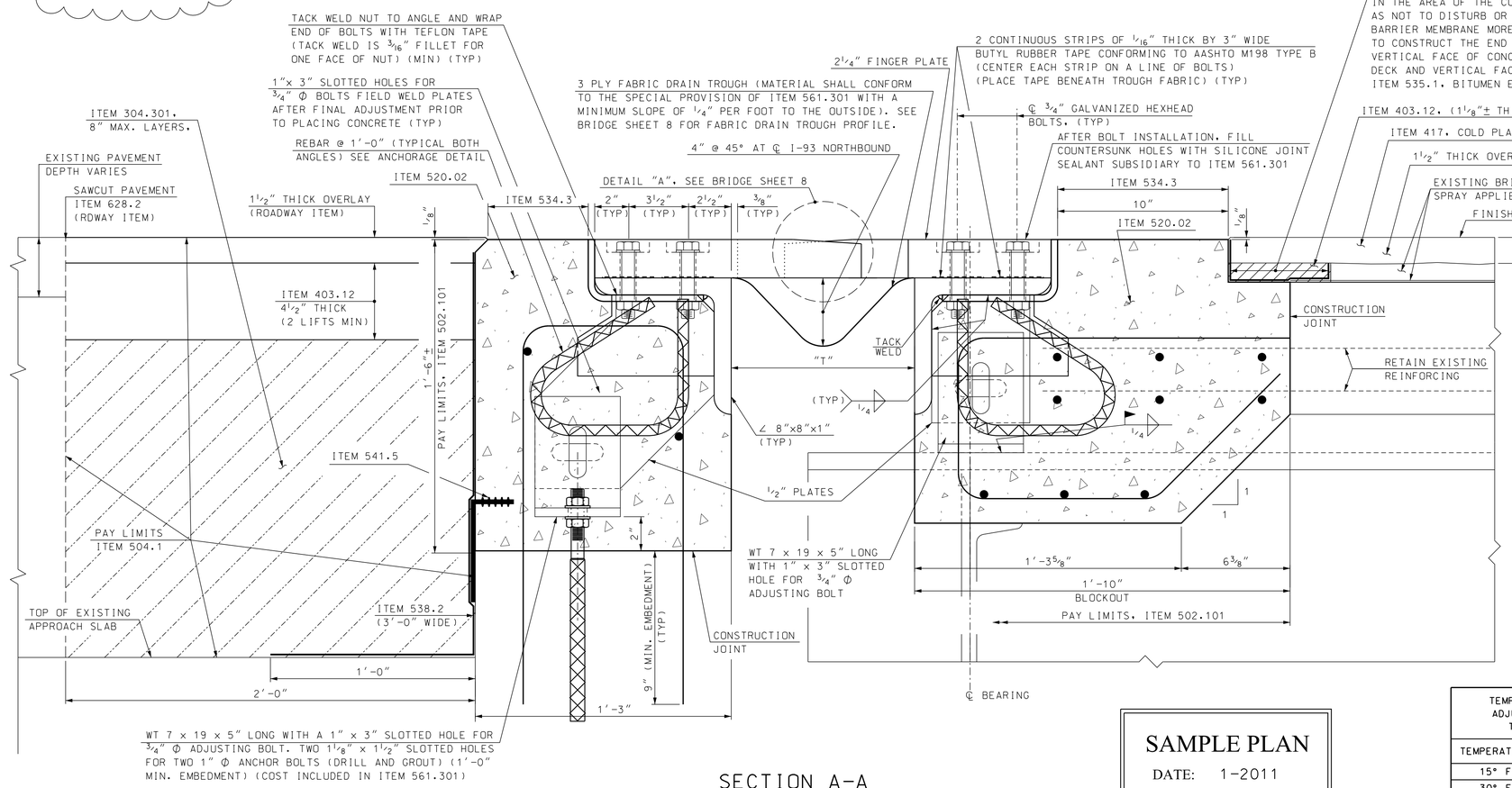

SECTION A-A

SCALE: 3" = 1'-0"

NOTE: USE NEW BACKING PLATE DETAIL

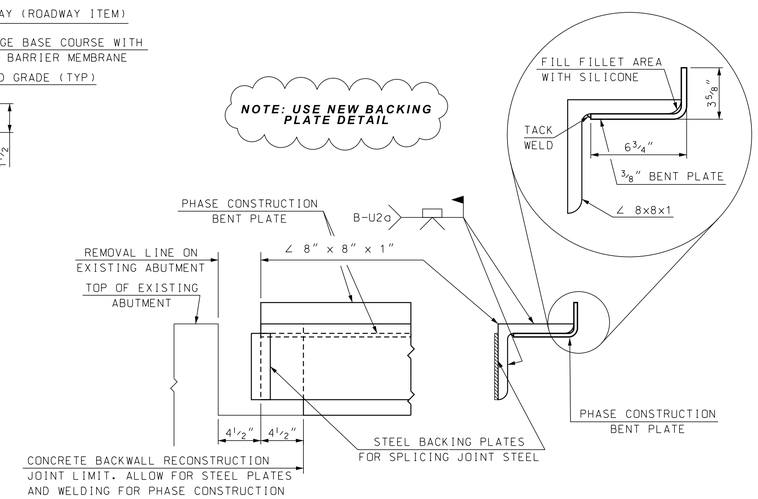

PHASE CONSTRUCTION JOINT SPLICING DETAILS

N.T.S.

TEMPERATURE ADJUSTMENT TABLE	
TEMPERATURE	"T"
15° F	11 9/16"
30° F	11 1/8"
45° F	10 3/4"
60° F	10 3/8"
75° F	10"

SAMPLE PLAN

DATE: 1-2011

SUBDIRECTORY	.DGN LOCATOR	SHEET SCALE
Finger Joint	Finger Jt Phase Constr	AS NOTED

STATE OF NEW HAMPSHIRE
DEPARTMENT OF TRANSPORTATION * BUREAU OF BRIDGE DESIGN

TOWN MANCHESTER BRIDGE NO. 123/118 STATE PROJECT 14605

LOCATION I-93 NORTHBOUND OVER STEVENS POND

ABUTMENT A FINGER EXPANSION JOINT (1 OF 3)

REVISIONS AFTER PROPOSAL		BY	DATE		BY	DATE
	DESIGNED	GMC	1/11	CHECKED	MGL	1/11
	DRAWN	GMC	1/11	CHECKED	SMG	1/11
	QUANTITIES	GMC	1/11	CHECKED	DDT	1/11
	ISSUE DATE		FEDERAL PROJECT NO.		SHEET NO.	
	REV. DATE		----------		21	

BRIDGE SHEET 7 OF XX

FILE NUMBER XX-X-X

TOTAL SHEETS XX

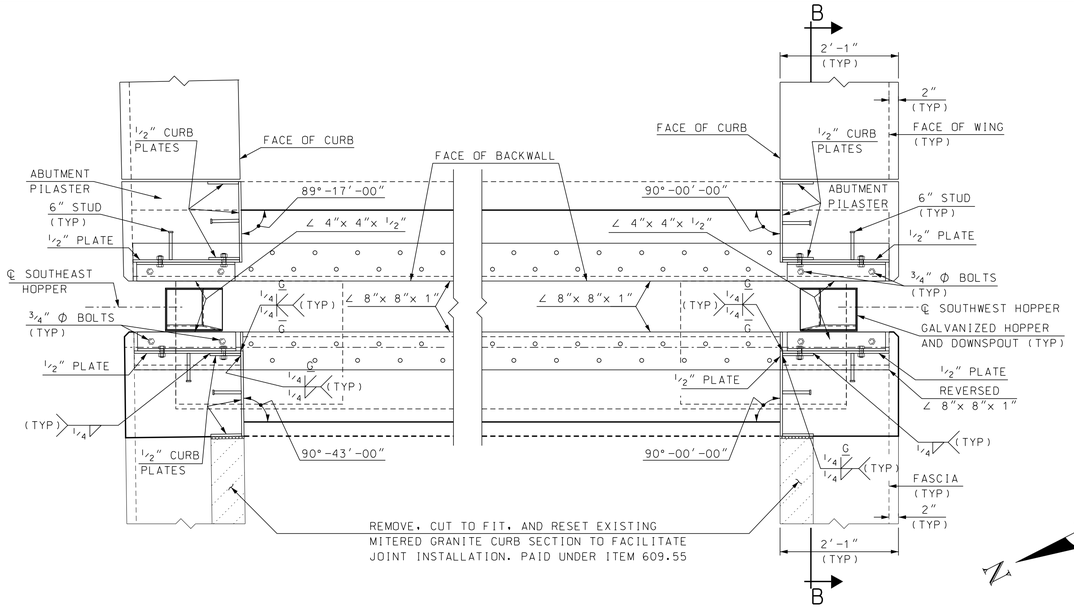

S.E. CORNER LOWER ASSEMBLY

(SIDE VERTICAL PLATES NOT SHOWN , SEE DETAIL BELOW)
SCALE: 3/4" = 1'-0"

S.W. CORNER LOWER ASSEMBLY

(SIDE VERTICAL PLATES NOT SHOWN , SEE DETAIL BELOW)
SCALE: 3/4" = 1'-0"

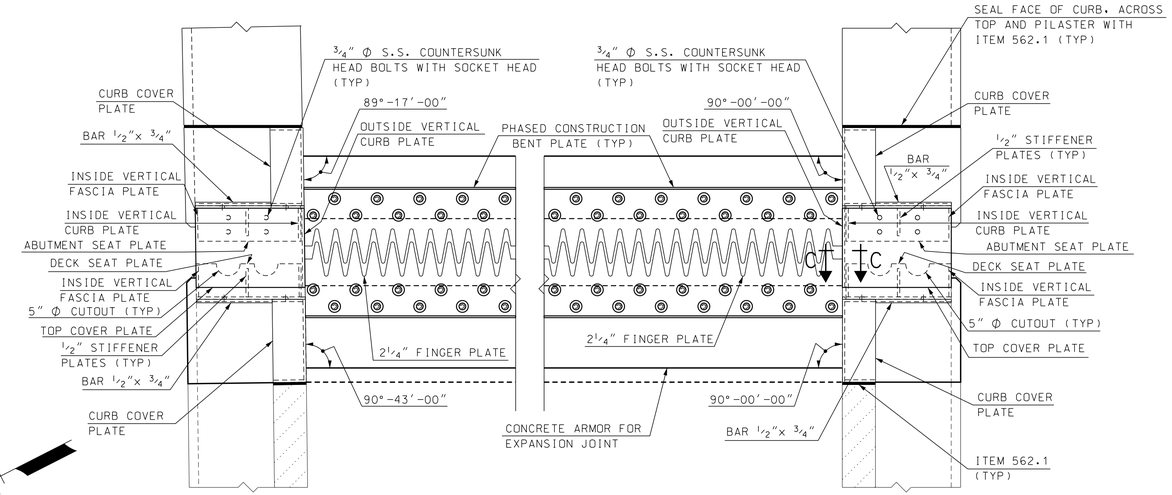

S.E. CORNER UPPER ASSEMBLY

(STUDS NOT SHOWN)
SCALE: 3/4" = 1'-0"

S.W. CORNER UPPER ASSEMBLY

(STUDS NOT SHOWN)
SCALE: 3/4" = 1'-0"

NOTE: DETAILS AND NOTES MAY NOT BE CURRENT. CLOSELY REVIEW BEFORE USING DETAILS.

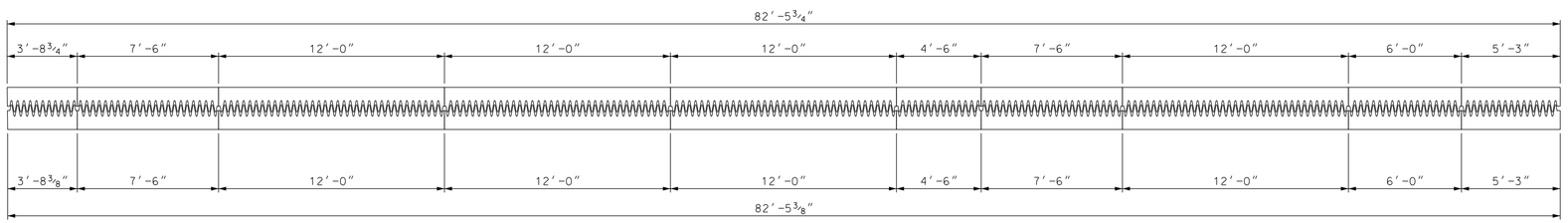

FINGER PLATE PLAN

SCALE: 1/4" = 1'-0"

NOTE: CURRENT POLICY STATES 1"/FT PREFERRED MIN. TROUGH SLOPE

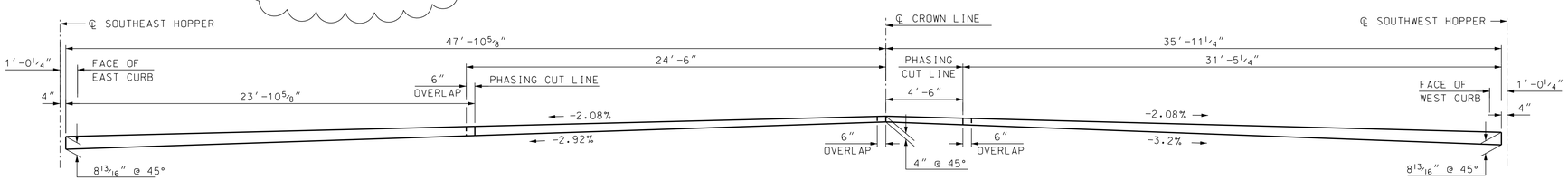

FABRIC DRAIN TROUGH PROFILE

SCALE: 1/4" = 1'-0"

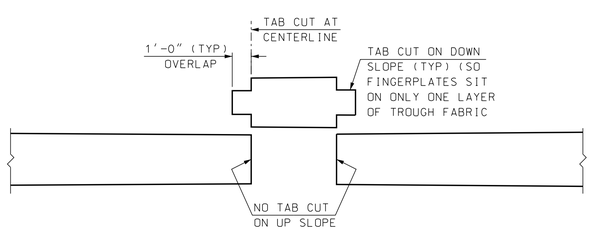

FABRIC DRAIN THROUGH CUTTING DETAIL

SCALE: 1/4" = 1'-0"

SAMPLE PLAN

DATE: 1-2011

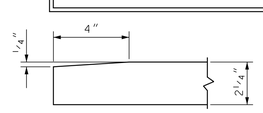

DETAIL "A"

SCALE: 3" = 1'-0"

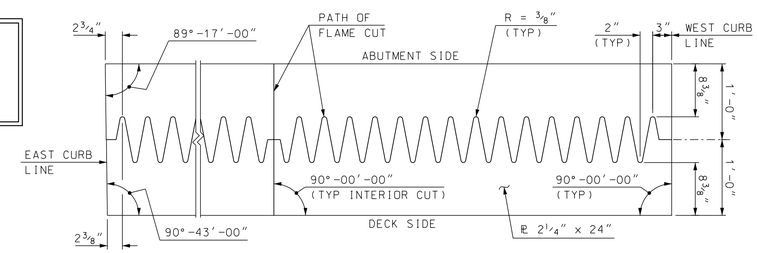

FINGER CUTTING DETAIL

EXPANSION JOINT NOTES

1. EXPANSION JOINT STEEL SHALL BE GALVANIZED AASHTO M270 GRADE 50 (ASTM A572, GR 50) OR AASHTO M222 (ASTM A588) GR. 50, EXCEPT AS OTHERWISE ALLOWED. THE ENTIRE ASSEMBLY SHALL BE PAID AS ITEM 561.301, PREFABRICATED EXPANSION JOINT, FINGER JOINT (F).
2. SPLICES FOR EXPANSION JOINT STEEL SHALL DEVELOP FULL STRENGTH.
3. THE EXPANSION JOINT SHALL BE PRESET TO THE TEMPERATURE ANTICIPATED AT THE TIME OF INSTALLATION. FINAL SETTING IN THE FIELD SHALL BE DETERMINED BY THE ENGINEER (SEE TEMPERATURE TABLE ON BRIDGE SHEET 7). THE MAXIMUM ALLOWABLE MOVEMENT SHALL BE XX INCHES.
4. PROTECT TOP OF EXPANSION JOINT DURING PLACEMENT OF CONCRETE AND BITUMINOUS PAVEMENT.
5. JOINT SUPPORT PLATES SHALL BE SHOP WELDED TO THE EXPANSION JOINT STEEL AND SHALL BE VERTICAL AFTER THE JOINT ASSEMBLY HAS BEEN ADJUSTED FOR ROADWAY CROSS-SLOPE AND GRADE.
6. FASCIA AND CURB PLATES SHALL BE SHOP WELDED AND SHALL BE VERTICAL AFTER THE JOINT ASSEMBLY HAS BEEN ADJUSTED FOR ROADWAY CROSS-SLOPE AND GRADE.
7. IMMEDIATELY AFTER THE JOINT HAS BEEN SECURED TO THE STRUCTURAL STEEL AND BACKWALL, REMOVE SHIPPING DEVICES. WELDING OF SHIPPING DEVICES TO FINGER PLATE SHALL NOT BE ALLOWED.
8. THE FINGER PLATES SHALL BE CUT FROM ONE CONTINUOUS 2'-0" WIDE x 2 1/4" THICK PLATE AS SHOWN ON THE FINGER CUTTING DETAIL, AND FURNISHED IN TEN LENGTHS.
9. THE HOPPERS AND DOWNSPOUTS SHALL BE A-36 GALVANIZED IN ACCORDANCE WITH SECTION 550. PAYMENT FOR HOPPERS, BLOCKING PADS AND ALL ATTACHMENTS WILL BE SUBSIDIARY TO ITEM 561.301.
10. ELEVATIONS SHOWN AT TOP OF FINGER PLATES ARE 1/8" LOWER THAN THE PROPOSED FINISHED ROADWAY GRADE.
11. SEE BRIDGE SHEET 9 FOR HOPPER DETAILS.
12. THE FABRIC TROUGH SHALL BE PREFORMED FABRIC MATERIAL AND SHALL BE CUT DURING SHOP PRE-ASSEMBLY. THE TROUGH MAY BE SUPPLIED IN THREE LENGTHS WITH 1'-0" OVERLAP AT PHASING LINE AND ℄ I-93 N.B. CROWN LINE.

NOTE:
FOR SECTION B-B AND SECTION C-C SEE BRIDGE SHEET 9.

SUBDIRECTORY	.DGN LOCATOR	SHEET SCALE
Finger Joint	Finger Jt Phase Constr	AS NOTED

STATE OF NEW HAMPSHIRE
DEPARTMENT OF TRANSPORTATION * BUREAU OF BRIDGE DESIGN

TOWN MANCHESTER BRIDGE NO. 123/118 STATE PROJECT 14605
LOCATION I-93 NORTHBOUND OVER STEVENS POND

ABUTMENT A FINGER EXPANSION JOINT (2 OF 3)

REVISIONS AFTER PROPOSAL		BY	DATE		BY	DATE
	DESIGNED	GMC	1/11	CHECKED	MGL	1/11
	DRAWN	GMC	1/11	CHECKED	SMG	1/11
	QUANTITIES	GMC	1/11	CHECKED	DDT	1/11
	ISSUE DATE		FEDERAL PROJECT NO.		SHEET NO.	
	REV. DATE		----------		22	

BRIDGE SHEET 8 OF XX
FILE NUMBER XX-X-X
TOTAL SHEETS XX

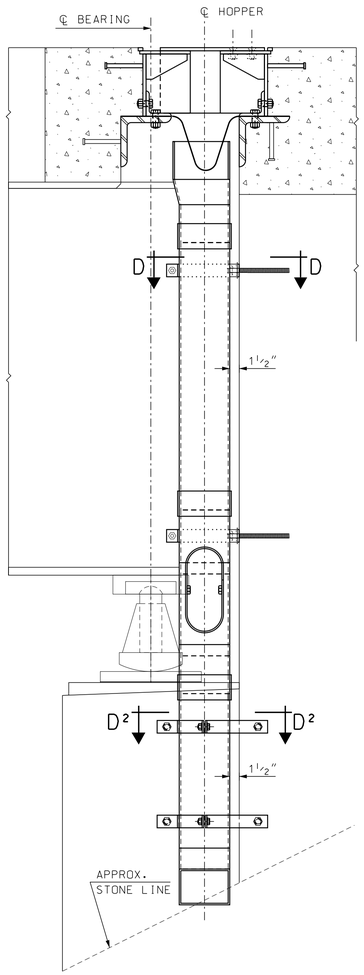

SIDE VIEW S.W. CORNER

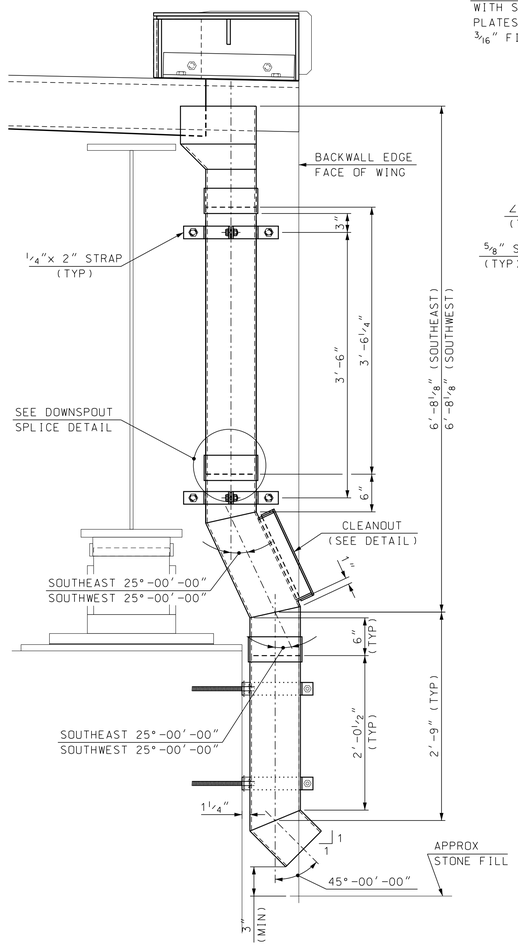

FRONT VIEW S.W. CORNER

SECTION B-B THRU ℄ HOPPER

SCALE: 1" = 1'-0"

SEE BR. SHT. 7 FOR HOPPER LOCATIONS
(ABUT. A, 2 REQUIRED)

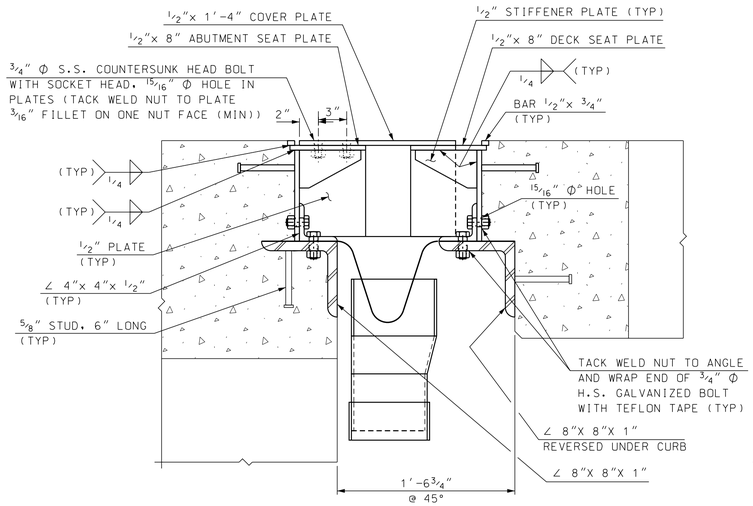

SECTION B-B IN CURB

SCALE: 1 1/2" = 1'-0"

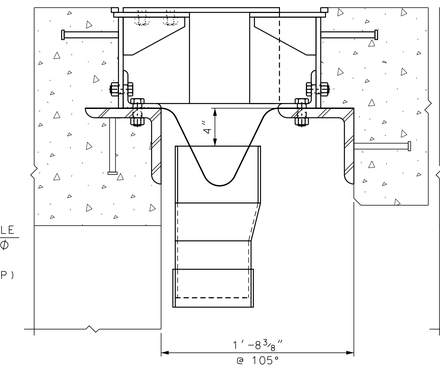

SECTION B-B MIN. OPENING

SCALE: 1 1/2" = 1'-0"

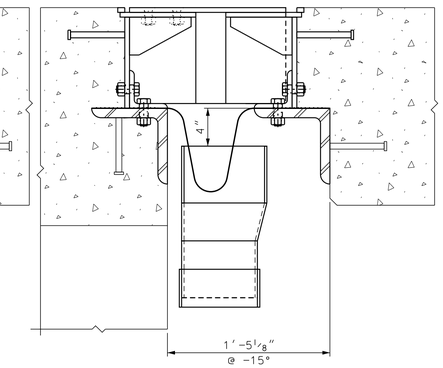

SECTION B-B MAX. OPENING

SCALE: 1 1/2" = 1'-0"

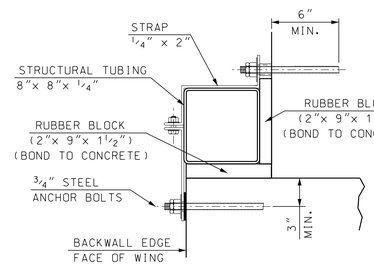

SECTION D²-D²

SCALE: 1 1/2" = 1'-0"

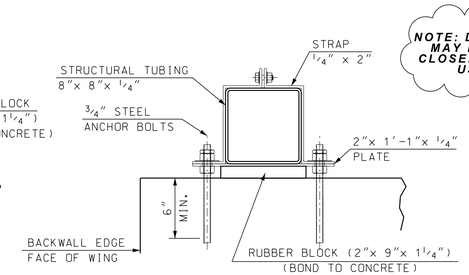

SECTION D-D

SCALE: 1 1/2" = 1'-0"

NOTE: DETAILS AND NOTES MAY NOT BE CURRENT. CLOSELY REVIEW BEFORE USING DETAILS.

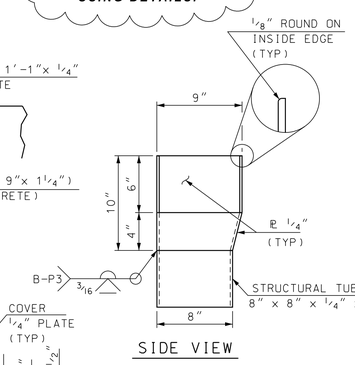

SIDE VIEW

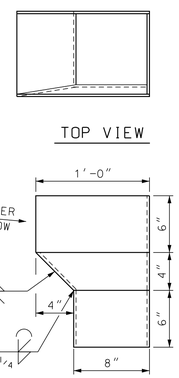

FRONT VIEW
SOUTHWEST HOPPER
(SOUTHEAST HOPPER OPPOSITE HAND)

HOPPER DETAIL

SCALE: 1 1/2" = 1'-0"

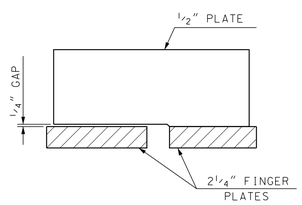

OUTSIDE VERTICAL CURB PLATE DETAIL

SCALE: 1 1/2" = 1'-0"

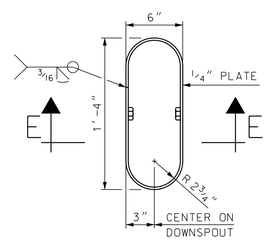

CLEANOUT DETAIL

SCALE: 1 1/2" = 1'-0"
(COVER REMOVED)

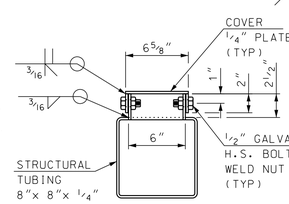

SECTION E-E

SCALE: 1 1/2" = 1'-0"

NOTE

(1) FOR EXPANSION JOINT NOTES, SEE BRIDGE SHEET 8.

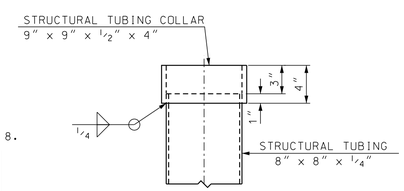

DOWNSPOUT SPLICE DETAIL

SCALE: 1 1/2" = 1'-0"

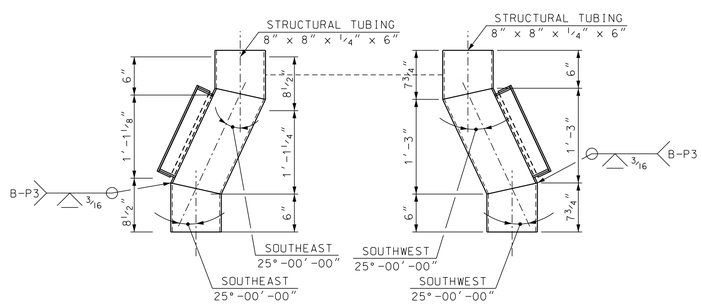

CLEANOUT DIRECTIONAL CHUTE DETAILS

SCALE: 1" = 1'-0"

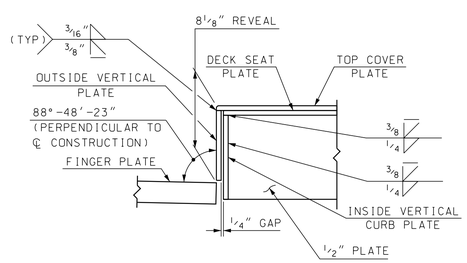

SECTION C-C

SCALE: 1 1/2" = 1'-0"

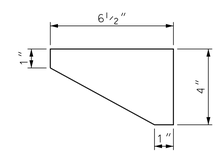

STIFFENER PLATE

SCALE: 3" = 1'-0"

SAMPLE PLAN

DATE: 1-2011

STATE OF NEW HAMPSHIRE

DEPARTMENT OF TRANSPORTATION * BUREAU OF BRIDGE DESIGN

TOWN MANCHESTER | BRIDGE NO. 123/118 | STATE PROJECT 14605

LOCATION I-93 NORTHBOUND OVER STEVENS POND

HOPPER DETAILS (3 OF 3)

REVISIONS AFTER PROPOSAL		BY	DATE		BY	DATE
	DESIGNED	GMC	1/11	CHECKED	MGL	1/11
	DRAWN	GMC	1/11	CHECKED	SMG	1/11
	QUANTITIES	GMC	1/11	CHECKED	DDT	1/11
	ISSUE DATE		FEDERAL PROJECT NO.		SHEET NO.	
	REV. DATE		----------		23	

BRIDGE SHEET 9 OF XX

FILE NUMBER XX-X-X

TOTAL SHEETS XX

SUBDIRECTORY	.DGN LOCATOR	SHEET SCALE
Finger Joint	Finger Jt Phase Constr	AS NOTED