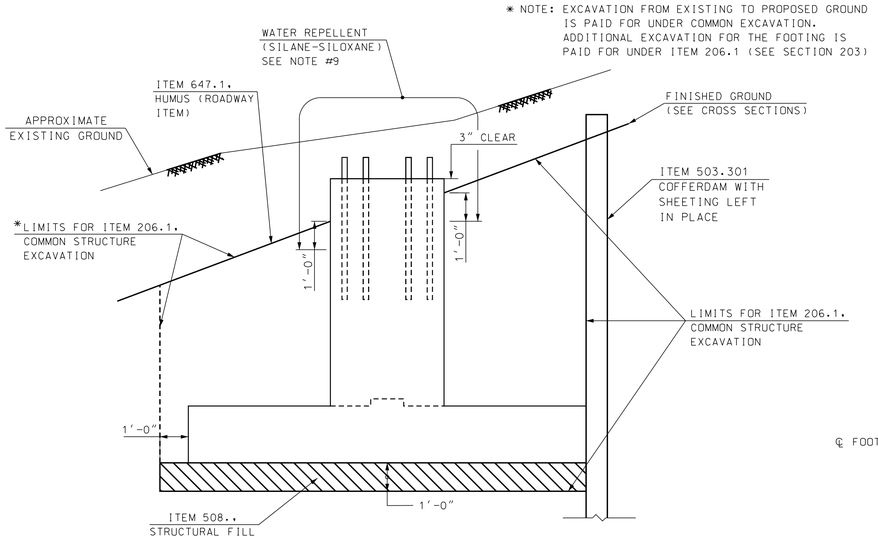

TYPICAL PAY LIMITS

SCALE: 3/8" = 1'-0"

SIGN FOOTING MASONRY & REINFORCEMENT FOR ITEM NO. 615.20001

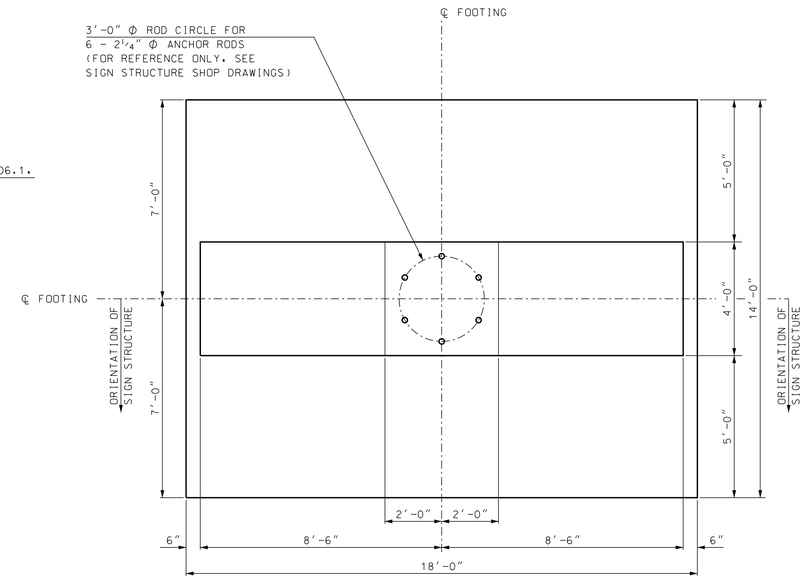

SIGN FOOTING MASONRY PLAN

SCALE: 3/8" = 1'-0"

SIGN FOOTING QUANTITY TABLE

ITEM NO.	ITEM DESCRIPTION	QUANTITY	UNIT
206.1	COMMON STRUCTURE EXCAVATION	152	CY
503.301	COFFERDAMS WITH SHEETING LEFT IN PLACE	1	U
508	STRUCTURAL FILL	14	CY
520.2	CONCRETE CLASS B	31.1	CY
544.1	REINFORCING STEEL (ROADWAY)	2429	LB

SIGN FOOTING ELEVATION TABLE

STATION	OFFSET	"A"	"B"
3094+00	LEFT 46'	131.86	121.86

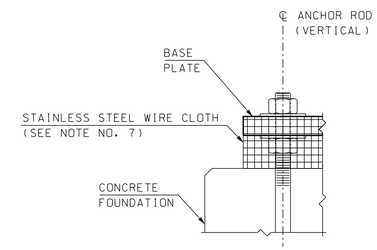

SCREEN DETAIL

NOT TO SCALE

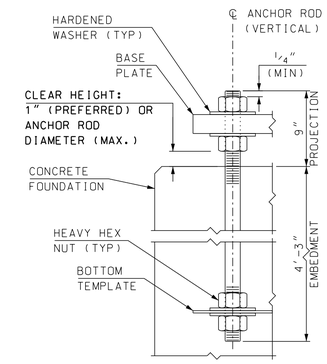

ANCHOR ROD DETAIL

NOT TO SCALE

SIGN FOOTING NOTES:

1. FOR THE INSTALLATION AND PRETENSIONING OF ANCHOR RODS, SEE SPECIAL PROVISION AMENDMENT TO SECTION 615, TRAFFIC SIGNS.
2. THERE IS 1 FOOTING OF THIS CONFIGURATION REQUIRED AND THE QUANTITIES GIVEN ARE TOTALED FOR THIS FOOTING.
3. ALL REINFORCING STEEL SHALL HAVE 3" MINIMUM CLEAR COVER FROM CONCRETE SURFACES.
4. FOOTINGS SHALL BE BACKFILLED TO FINAL GROUND BEFORE THE SIGN SUPPORT STRUCTURE IS INSTALLED.
5. FINAL GROUND ELEVATIONS SHALL BE TAKEN FROM THE ROADWAY CROSS SECTIONS. IF ACTUAL FINAL GROUND ELEVATIONS DIFFER BY MORE THAN 1'-0", THEN A COMPLETE REDESIGN OF THE SIGN FOOTING WILL BE REQUIRED.
6. THE FOOTING DESIGN SIGN AREA IS 312.0 SF. THIS INCLUDES A 30% INCREASE.
7. STAINLESS STEEL STD. GR. WIRE CLOTH, ¼" MAX. OPENING WITH MIN. WIRE DIA. OF AWG NO. 16 WITH 2" LAP. SECURE WITH ¾" STAINLESS STEEL BANDING AFTER ANCHOR RODS ARE FULLY TGHTENED AND TESTED. (SUBSIDIARY TO ITEM 615.XX)
8. ALLOWABLE BEARING PRESSURE FOR THE FOUNDATION = 3 KSF SEE THE GEOTECHNICAL REPORT FOR FURTHER INFORMATION.
9. WATER REPELLENT (SILANE-SILOXANE) SHALL BE APPLIED TO ALL EXPOSED CONCRETE SURFACES TO 1'-0" BELOW FILL LINES IN ACCORDANCE WITH SECTION 534. ALL COSTS SUBSIDIARY TO ITEM 520.2.

SIGN FOOTING REINFORCING SCHEDULE

MARK	SIZE	NO.	UNBENT LENGTH	TYPE
A1	#6	28	17'-6"	STRAIGHT
A2	#6	36	13'-6"	STRAIGHT
A3	#4	2	20'-2"	HOOP
A4	#4	2	18'-6"	HOOP
A5	#4	2	16'-10"	HOOP
A6	#4	2	15'-4"	HOOP
A7	#4	2	13'-8"	HOOP
A8	#4	2	12'-0"	HOOP
A9	#4	2	10'-4"	HOOP
A10	#7	10	9'-6"	STRAIGHT
A11	#4	4	2'-8"	STRAIGHT
A12	#4	4	3'-11"	STRAIGHT
A13	#4	4	5'-1"	STRAIGHT
A14	#4	4	6'-4"	STRAIGHT
A15	#4	4	7'-7"	STRAIGHT
A16	#4	4	8'-10"	STRAIGHT
A17	#8	12	16'-8"	BENT & CURVED

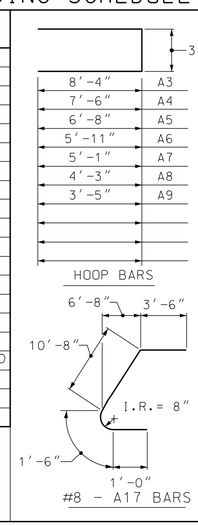

REINFORCING STEEL IN SCHEDULE IS FOR 1 SIGN FOOTING.
TOTAL WEIGHT OF REINFORCING STEEL IN TABLE IS 2429 lbs.
REINFORCING STEEL SHALL BE GRADE 60

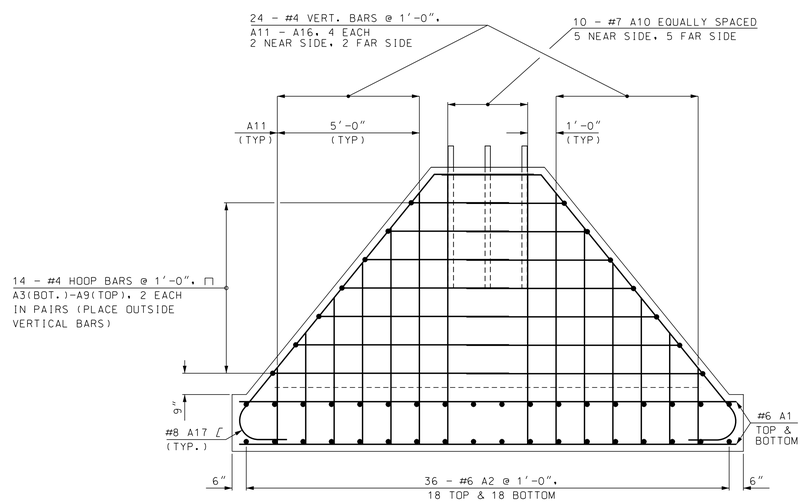

REINFORCING - SIDE ELEVATION

SCALE: 3/8" = 1'-0"

SAMPLE PLAN

DATE: 4-15-2014

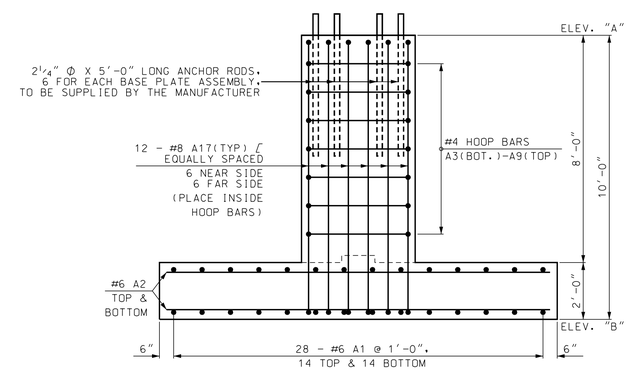

REINFORCING - END ELEVATION

SCALE: 3/8" = 1'-0"

STATE OF NEW HAMPSHIRE
DEPARTMENT OF TRANSPORTATION * BUREAU OF BRIDGE DESIGN

TOWN SALEM | BRIDGE NO. N/A | STATE PROJECT 13933D

LOCATION I-93 SB (NORTH OF EXIT 1, MILE MARKER 1.8)

OVERHEAD SIGN STRUCTURE FOOTING

REVISIONS AFTER PROPOSAL		BY	DATE		BY	DATE
	DESIGNED	ACJ	5/11	CHECKED	KFD	5/11
	DRAWN	ACJ	5/11	CHECKED	KFD	5/11
	QUANTITIES	ACJ	5/11	CHECKED	KFD	5/11
	ISSUE DATE		FEDERAL PROJECT NO.		SHEET NO.	
	REV. DATE		----------		1	

BRIDGE SHEET OF
FILE NUMBER 115-3
TOTAL SHEETS 4

INV #: 399-0093-0001-S1.8

SUBDIRECTORY	.DGN LOCATOR	SHEET SCALE
Salem-Manchester 13933D	615_2000x	AS NOTED