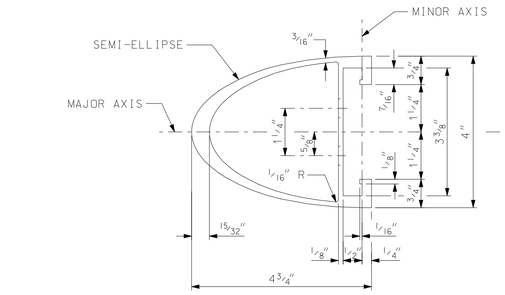

SECTION B-B

HALF SIZE

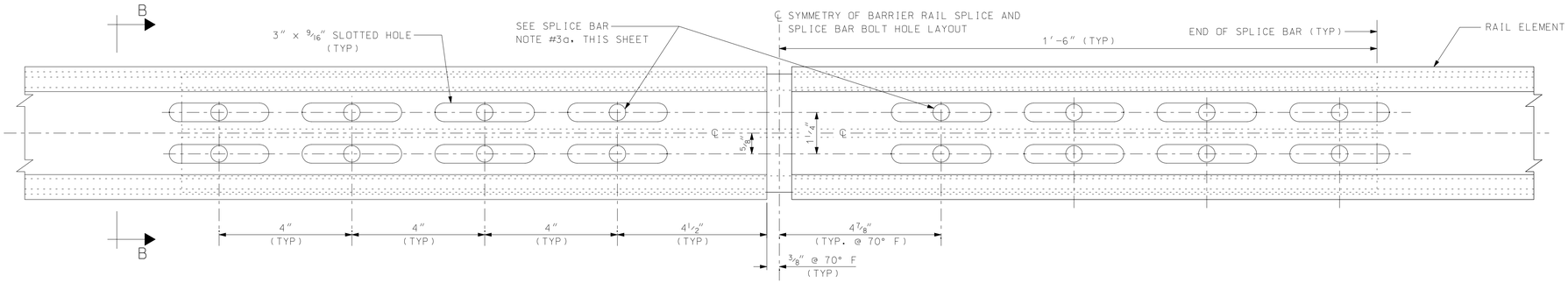

STANDARD SPLICE ASSEMBLY DETAIL

BACK ELEVATION VIEW - HALF SIZE

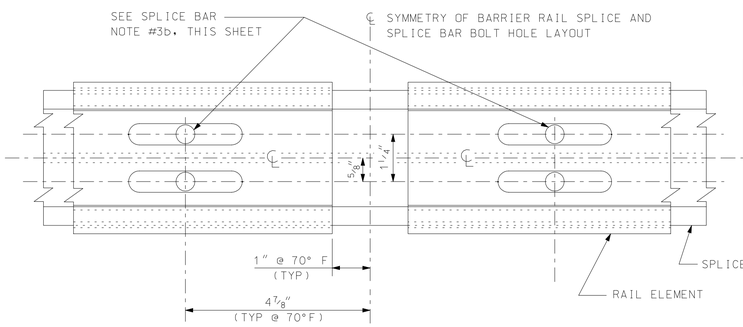

SPLICE ASSEMBLY DETAIL AT BRIDGE EXPANSION JOINT

BACK ELEVATION VIEW - HALF SIZE

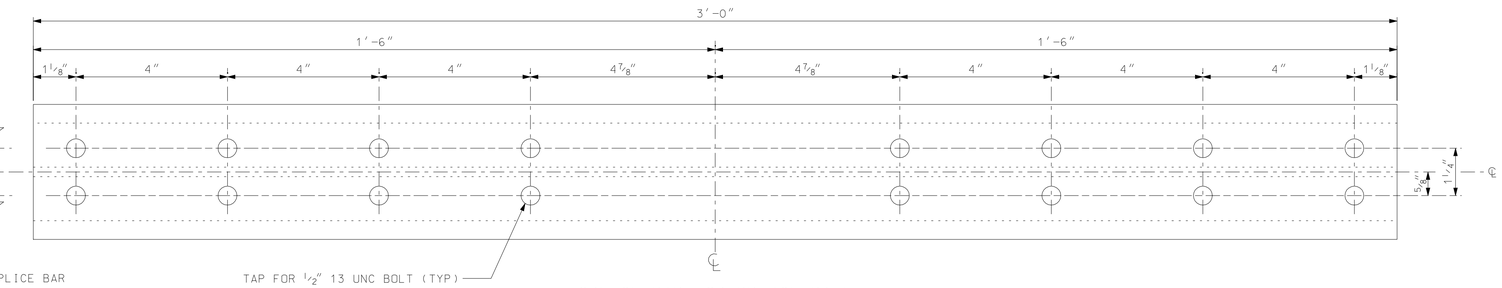

SPLICE BAR FOR BRIDGE RAIL

BACK ELEVATION VIEW - HALF SIZE

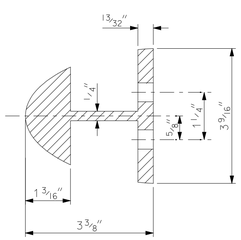

SECTION A-A

HALF SIZE

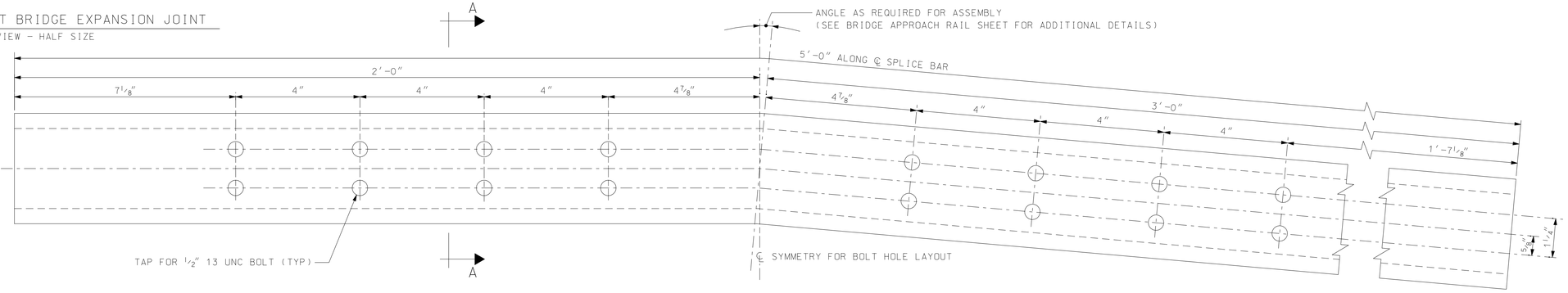

SPLICE BAR FOR BRIDGE APPROACH RAIL

BACK ELEVATION VIEW - HALF SIZE

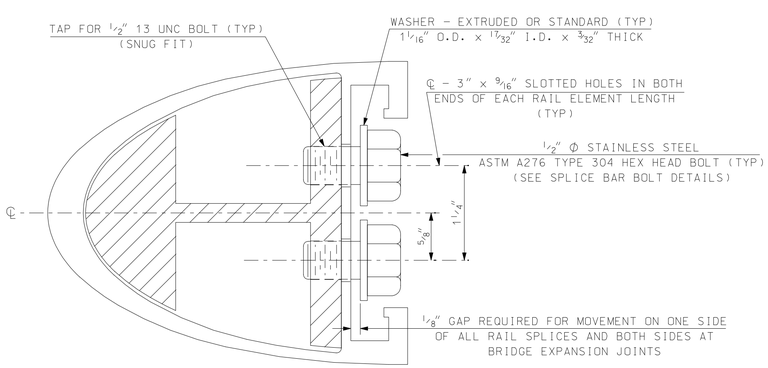

BRIDGE RAIL & SPLICE BAR - ASSEMBLY DETAIL

SECTION VIEW - FULL SCALE

SPLICE BAR NOTES

(1) FOR MATERIALS SPECIFICATIONS AND ADDITIONAL DETAILS, SEE THE BRIDGE RAIL AND BRIDGE APPROACH RAIL SHEETS.

(2) ALL BRIDGE RAILS AND BRIDGE APPROACH RAILS SHALL HAVE SLOTTED HOLES AT BOTH ENDS OF EACH RAIL ELEMENT.

(3) THE SPLICE BAR SHALL BE ATTACHED TO THE RAIL ELEMENT AS FOLLOWS:

(a) THE STANDARD SPLICE FOR BOTH BRIDGE AND APPROACH RAILS SHALL BE FASTENED ON ONE SIDE USING STANDARD BOLTS & WASHERS TIGHTENED SECURELY. THE OTHER SIDE OF THE SPLICE SHALL USE THE PARTIALLY THREADED BOLT WITH EITHER THE EXTRUDED WASHER OR THE WELDED WASHER, TIGHTENED SECURELY TO THE END OF THE THREADS, AND LEAVING A 1/8" GAP. THIS ALLOWS EXPANSION ON ONE SIDE OF THE JOINT.

(b) THE RAIL SPLICE AT THE BRIDGE EXPANSION JOINT SHALL BE FASTENED ON BOTH SIDES OF THE RAIL SPLICE USING THE PARTIALLY THREADED BOLTS, WITH EITHER THE EXTRUDED WASHER OR THE WELDED WASHER, TIGHTENED SECURELY TO THE END OF THE THREADS, AND LEAVING A 1/8" GAP. THIS ALLOWS EXPANSION ON BOTH SIDES OF THE JOINT.

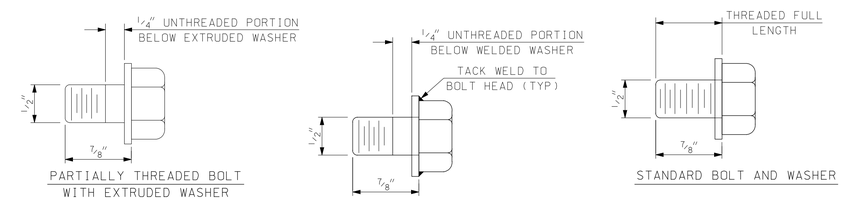

SPLICE BAR BOLT DETAILS

FULL SIZE

STATE OF NEW HAMPSHIRE

DEPARTMENT OF TRANSPORTATION * BUREAU OF BRIDGE DESIGN

TOWN	BRIDGE NO.	STATE PROJECT
LOCATION		

BRIDGE RAIL SPLICE BAR DETAILS (ALUMINUM)

REVISIONS AFTER PROPOSAL	BY	DATE		BY	DATE
DESIGNED	NHDOT	9/87	CHECKED	NHDOT	
DRAWN	NDS/MTG	4/01	CHECKED	PJP	6/01
QUANTITIES			CHECKED		
ISSUE DATE	10/87	FEDERAL PROJECT NO.		SHEET NO.	
REV. DATE	1/02/01				

BRIDGE SHEET OF

FILE NUMBER

TOTAL SHEETS

SUBDIRECTORY	.DGN LOCATOR	SHEET SCALE
English/AL-RAIL	AL-SPLICEBAR	AS NOTED