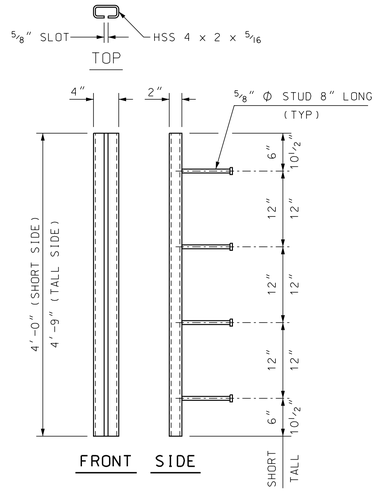

STRUCTURAL SECTION DETAILS

SCALE: 1" = 1'-0"

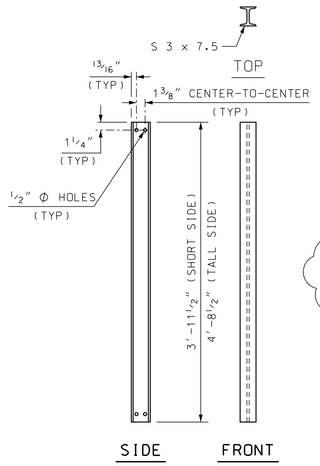

I-BEAM DETAILS

SCALE: 1" = 1'-0"

NO MODIFICATIONS SHALL BE MADE TO THIS SHEET.

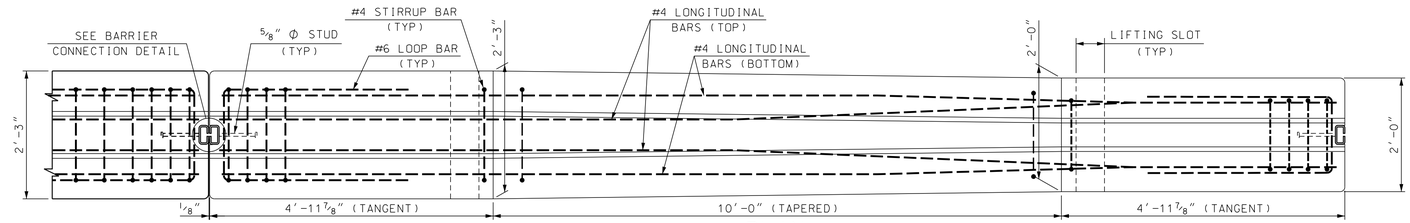

PLAN

SCALE: 3/4" = 1'-0"

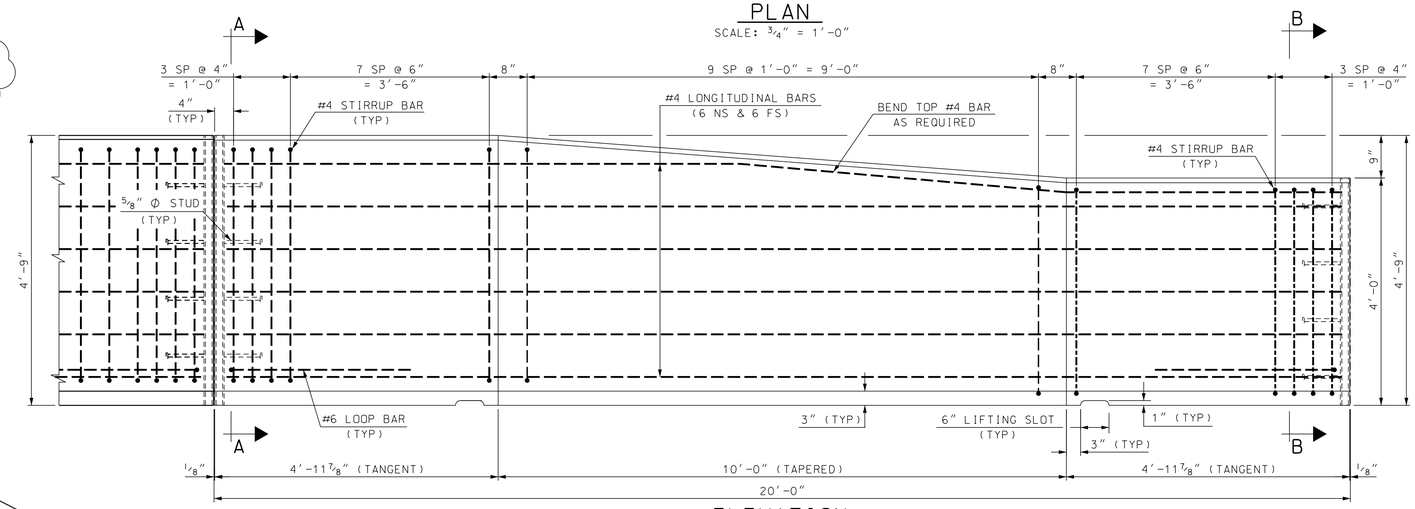

ELEVATION

SCALE: 3/4" = 1'-0"

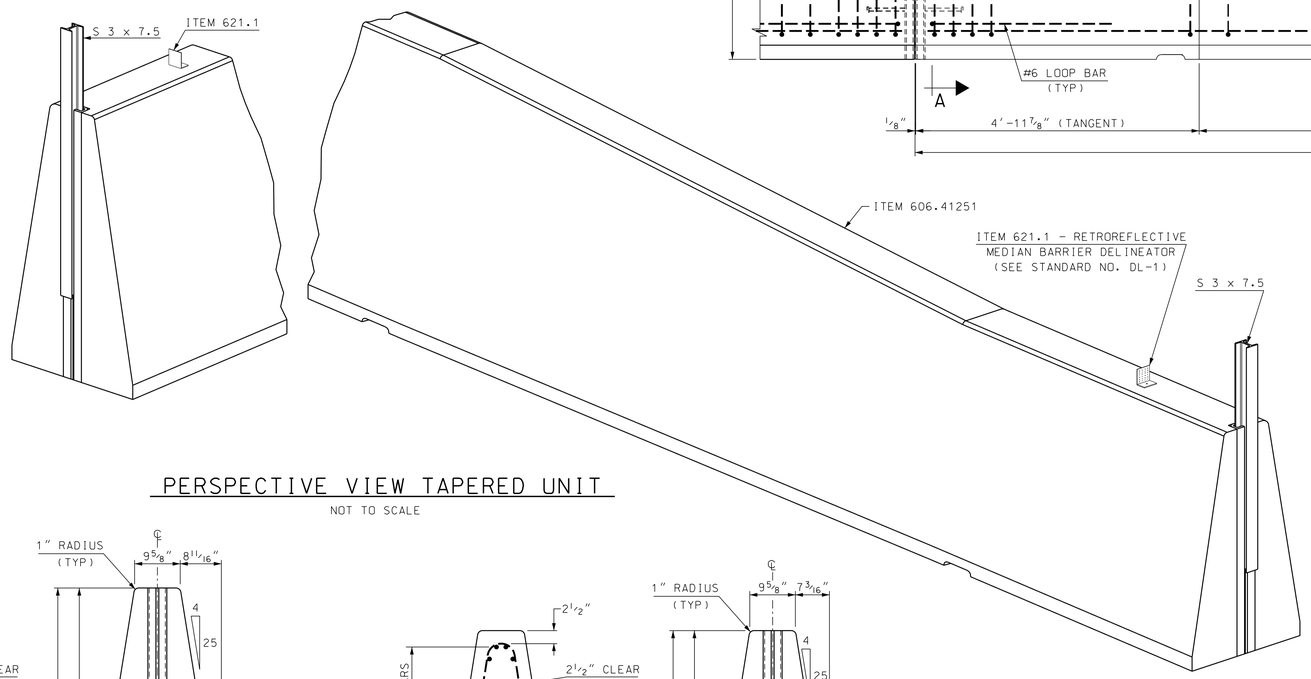

PERSPECTIVE VIEW TAPERED UNIT

NOT TO SCALE

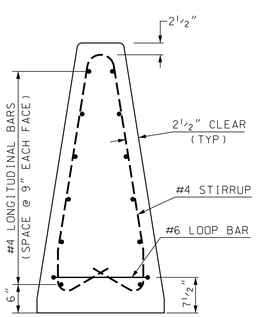

SECTION A-A (REINFORCEMENT)

SCALE: 3/4" = 1'-0"

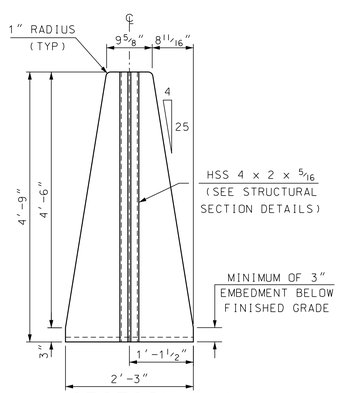

SECTION A-A (MASONRY)

SCALE: 3/4" = 1'-0"

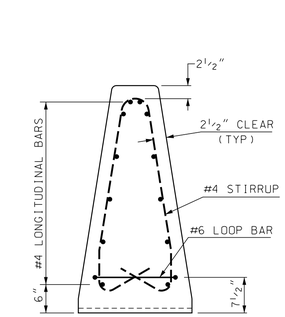

SECTION B-B (REINFORCEMENT)

SCALE: 3/4" = 1'-0"

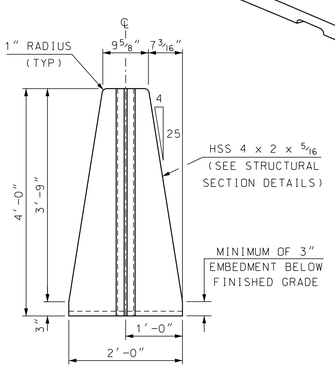

SECTION B-B (MASONRY)

SCALE: 3/4" = 1'-0"

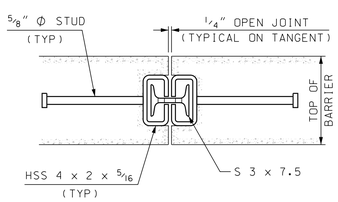

BARRIER CONNECTION DETAIL

SCALE: 2" = 1'-0"

GENERAL NOTES

1. CONCRETE BARRIER AND ALL ITS COMPONENTS SHALL BE FURNISHED BY THE CONTRACTOR AND PAID AS ITEM 606.41251, 54" TO 45" TRANSITION SINGLE SLOPE CONCRETE BARRIER, PRECAST.
2. STUD WELDING SHALL BE IN ACCORDANCE WITH SECTION 547.
3. SLOTS IN STRUCTURAL TUBES SHALL BE CUT WITH MECHANICALLY GUIDED MEANS TO A SMOOTH, UNIFORM SURFACE MEETING A SURFACE ROUGHNESS OF 25 μ OR BETTER (ANSI B46.1).
4. CONCRETE BARRIER DETAILS SHOWN ON THIS SHEET ARE IN COMPLIANCE WITH REQUIREMENTS PER UPDATED NCHRP REPORT 350 FOR TEST NO. 5-11 (MASH TL-5), NCHRP 157 VOL. 1.

MATERIAL NOTES

1. THE BARRIERS SHALL BE LIGHT COLORED CLASS AA CONCRETE HAVING A MINIMUM 28 DAY COMPRESSIVE STRENGTH OF 4,000 PSI. BARRIERS SHALL HAVE A SMOOTH UNIFORM SURFACE FREE OF DEFECTS AND IRREGULARITIES. CASTING DATE SHALL BE SHOWN ON BARRIER. ALL EXPOSED EDGES OF CONCRETE SHALL BE CHAMFERED 3/4", UNLESS NOTED OTHERWISE.
2. I-BEAMS AND STRUCTURAL TUBES SHALL BE ASTM A36 OR A572 GALVANIZED AFTER FABRICATION, IN ACCORDANCE WITH SECTION 550.
3. ALL REINFORCING STEEL SHALL BE AASHTO M31 (ASTM-A615) GRADE 60, EPOXY COATED. REINFORCEMENT SHOWN IS THE MINIMUM REQUIRED.
4. EACH BARRIER UNIT SHALL INCLUDE ONE S 3x7.5.
5. SHOP DRAWINGS SHALL INCLUDE REINFORCING SCHEDULE.
6. LEVELING PADS, SHIMMING MATERIAL, AND FLOWABLE FILL SHALL BE SUBSIDIARY TO THE CONCRETE BARRIER.

STATE OF NEW HAMPSHIRE
DEPARTMENT OF TRANSPORTATION * BUREAU OF BRIDGE DESIGN

TOWN	BRIDGE NO.	STATE PROJECT
LOCATION		

54" TO 45" TRANSITION SINGLE SLOPE CONCRETE BARRIER, PRECAST

BRIDGE SHEET OF FILE NUMBER

REVISIONS AFTER PROPOSAL		BY	DATE		BY	DATE
	DESIGNED	NHDOT	2/13	CHECKED	NHDOT	2/13
	DRAWN	GMC	2/13	CHECKED	ABH	2/13
	QUANTITIES	XX	XX	CHECKED	XX	XX
	ISSUE DATE	9/20/13	FEDERAL PROJECT NO.		SHEET NO.	TOTAL SHEETS
	REV. DATE	---				

SUBDIRECTORY	.DGN LOCATOR	SHEET SCALE
English/VC PIER PRO	54SS-TAPERED UNIT	AS NOTED