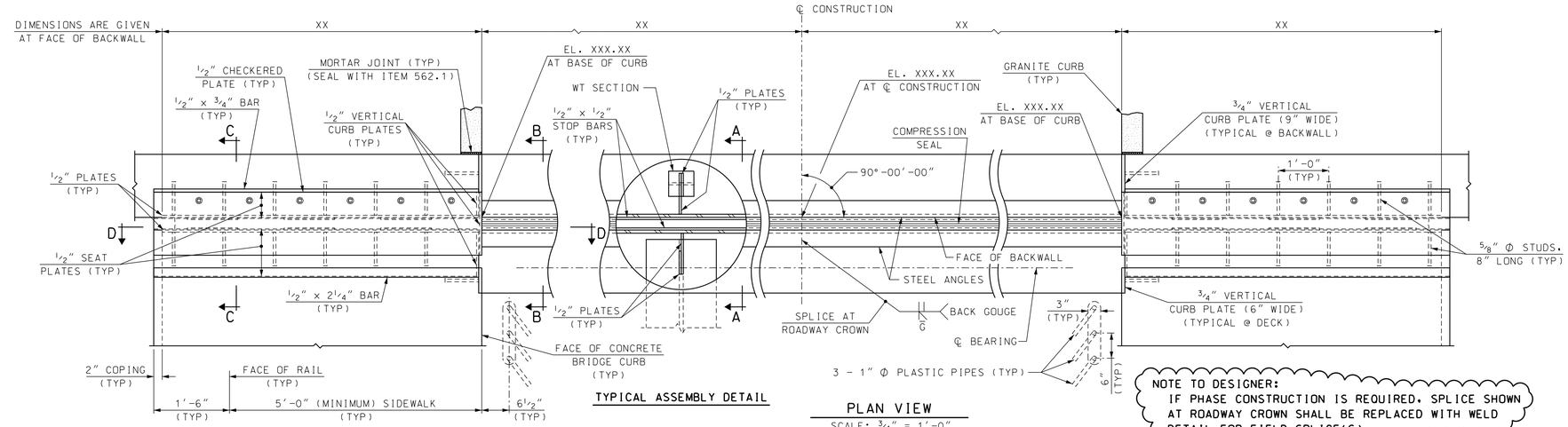

TYPICAL ASSEMBLY DETAIL

PLAN VIEW

SCALE: 3/4" = 1'-0"

NOTE TO DESIGNER:
IF PHASE CONSTRUCTION IS REQUIRED, SPLICE SHOWN AT ROADWAY CROWN SHALL BE REPLACED WITH WELD DETAIL FOR FIELD SPLICE(S)

EXPANSION JOINT NOTES

(1) ALL EXPANSION JOINT STEEL, INCLUDING ANCHORS, SHALL BE GALVANIZED. STEEL ANGLES SHALL BE ASTM A572 GRADE 50. MINOR STEEL PLATES MAY CONFORM TO ASTM A36. THE ENTIRE ASSEMBLY, INCLUDING COMPRESSION SEAL, SHALL BE PAID FOR AS ITEM 560.1001, PREFABRICATED COMPRESSION SEAL EXPANSION JOINT (F).

(2) SPLICES FOR STEEL ANGLES SHALL DEVELOP FULL STRENGTH.

(3) EXPANSION JOINT OPENING SHALL BE ADJUSTED TO TEMPERATURE ANTICIPATED JUST PRIOR TO POURING DECK BLOCKOUT. FINAL SETTING IN THE FIELD SHALL BE DETERMINED BY THE CONTRACT ADMINISTRATOR. SEE TEMPERATURE ADJUSTMENT TABLE & NOTES.

(4) THE COMPRESSION SEAL SHALL BE FURNISHED IN ONE CONTINUOUS LENGTH. NO SPLICES WILL BE ALLOWED. SEAL SHALL BE INSTALLED IN THE FIELD BY THE CONTRACTOR, IN ACCORDANCE WITH THE MANUFACTURER OF THE SEAL, USING AN APPROVED TOOL THAT WILL NOT DAMAGE THE SEAL.

(5) JOINT SUPPORT PLATES AND CURB PLATES SHALL BE SHOP WELDED TO EXPANSION JOINT STEEL AND SHALL BE NORMAL TO GRADE AFTER JOINT ASSEMBLY HAS BEEN ADJUSTED FOR ROADWAY CROSS-SLOPE AND GRADE. STEEL ANGLES SHALL BE ASSEMBLED WITH A CONSTANT JOINT OPENING TO ENSURE PROPER PERFORMANCE AND WATER TIGHTNESS.

(6) THE EXPANSION JOINT ASSEMBLY SHALL BE INSTALLED ONLY AFTER BOTH ABUTMENTS HAVE BEEN BACKFILLED TO WITHIN 3'-0" OF FINISHED GRADE.

(7) IMMEDIATELY AFTER THE JOINT HAS BEEN SECURED TO THE STRUCTURAL STEEL AND BACKWALL, REMOVE SHIPPING DEVICES AND GRIND SMOOTH ANY WELDS ON EXPOSED SURFACES. REPAIR ANY DAMAGE TO GALVANIZED SURFACES IN ACCORDANCE WITH SECTION 550.

(8) PROTECT TOP OF EXPANSION JOINT DURING PLACEMENT OF CONCRETE AND BITUMINOUS PAVEMENT.

(9) THE COMPRESSION SEAL HAS BEEN DESIGNED FOR A TOTAL FACTORED MOVEMENT OF XX INCHES. DESIGN INCLUDES MOVEMENT DUE TO TEMPERATURE, SKEW, SHRINKAGE AND MINIMUM INSTALLATION WIDTH. THE CONTRACTOR SHALL USE A WA-XX SEAL BY WATSON BOWMAN OR CV-XXXX BY D.S. BROWN.

(10) ELEVATIONS SHOWN AT TOP OF ANGLES ARE 1/8" LOWER THAN PROPOSED FINISHED ROADWAY GRADE.

(11) ANGLES 6" x 4" x 3/4" SHALL BE UTILIZED FOR SEALS LESS THAN 5" (HEIGHT). FOR SEALS GREATER THAN OR EQUAL TO 5" (HEIGHT) STEEL ANGLES SHALL BE 8" x 4" x 3/4".

(12) PRIOR TO INSTALLING THE SEAL, ALL TEMPORARY FORM WORK SHALL BE REMOVED. STEEL ANGLES AND STOP BARS SHALL BE MAINTAINED FREE FROM DIRT, WATER AND ANY OTHER LOOSE DEBRIS, WITH THE USE OF COMPRESSED AIR, TO ENSURE PROPER FIT OF THE SEAL. CARE SHALL BE TAKEN NOT TO DAMAGE GALVANIZED SURFACES.

(13) A TEMPORARY SEAL(S) SHALL BE INSTALLED PRIOR TO THE START OF THE WINTER MAINTENANCE PERIOD FOR ALL JOINT ASSEMBLIES OR PORTIONS THEREOF THAT WILL BE IN PLACE THROUGHOUT THE WINTER. ALL TEMPORARY SEALS SHALL BE REMOVED AND JOINT OPENINGS AND SUBSTRUCTURE SHALL BE CLEANED PRIOR TO INSTALLING THE FINAL SEAL. ALL COSTS SHALL BE SUBSIDIARY TO ITEM 560.1001.

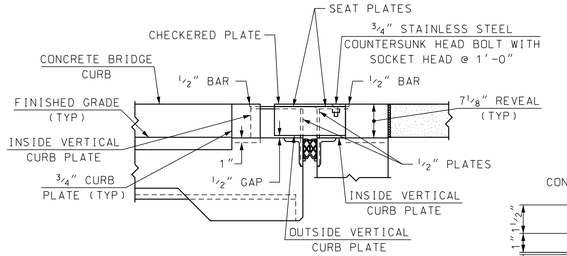

SECTION B-B

SCALE: 3/4" = 1'-0"

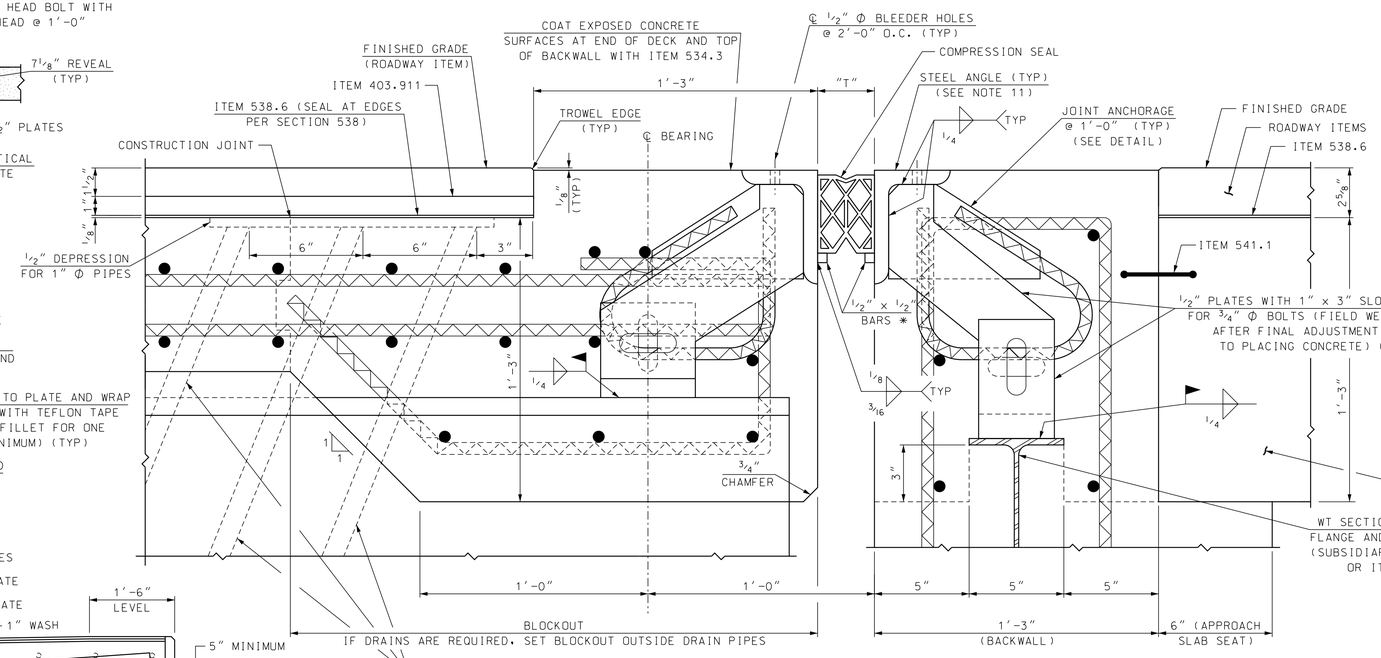

3-1" Φ PVC DRAINS AT LOW END ONLY. SET PIPES TO DISCHARGE AWAY FROM GIRDERS AND ABUTMENT (PIER) SEAT. PROVIDE BREAKS THROUGH MEMBRANE AND SEAL. ATTACH DRAIN PIPES TO BOTTOM FLANGE WITH CLIP AND EXTEND DRAINS 6" MINIMUM BELOW BOTTOM OF STRUCTURAL STEEL. ALL COSTS SUBSIDIARY TO ITEM 520.7X02 OR ITEM 520.7X026.

* STOP BARS SHALL BE PLACED X" FROM TOP OF ANGLES

SECTION A-A

SCALE: 3" = 1'-0"

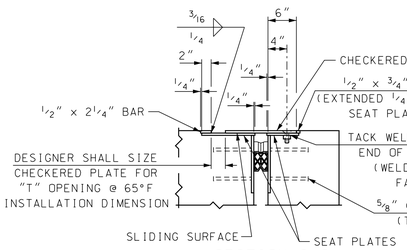

SECTION C-C

SCALE: 3/4" = 1'-0"

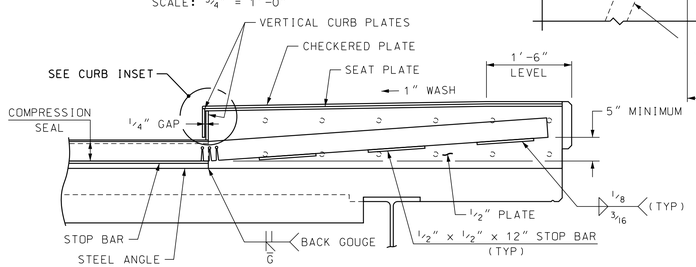

SECTION D-D

SCALE: 3/4" = 1'-0"

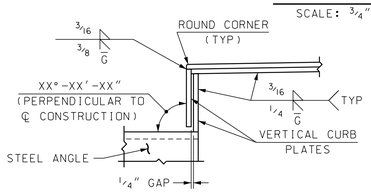

CURB INSET

NOT TO SCALE

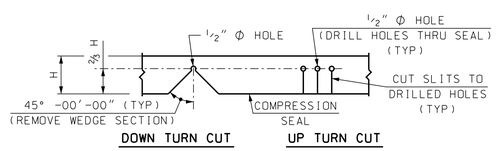

RELIEF CUT DETAILS

NOT TO SCALE

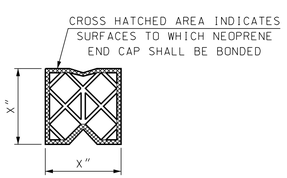

UNCOMPRESSED SEAL

NOT TO SCALE

TEMPERATURE ADJUSTMENT TABLE	
TEMPERATURE	"T"
20°F	X
35°F	X
50°F	X
65°F	X
80°F	X
95°F	X

MODIFY SHEET AS REQUIRED TO FIT PROJECT

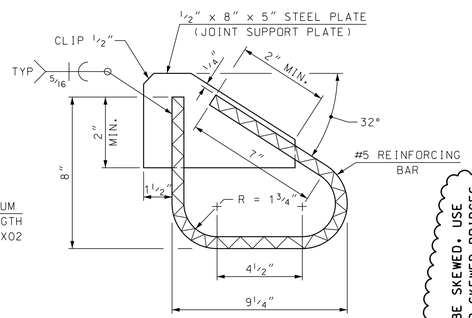

ANCHOR DETAIL (90° CROSSING)

SCALE: 3" = 1'-0"

NOTE TO DESIGNER:
IF BRIDGE SHALL BE SKEWED, USE ANCHOR DETAIL FOR SKEWED BRIDGES

TEMPERATURE ADJUSTMENT NOTES

1. "T" DIMENSIONS ARE PERPENDICULAR TO FACE OF BACKWALL.
2. MINIMUM "T" WIDTH FOR SEAL INSTALLATION = X" (APPROXIMATELY 65°F OR LESS).
3. VALUES IN THE TEMPERATURE ADJUSTMENT TABLE ARE FOR SETTING THE EXPANSION JOINT ASSEMBLY IMMEDIATELY PRIOR TO POURING THE DECK BLOCKOUT.

SUBDIRECTORY	.DGN LOCATOR	SHEET SCALE
English/EXP-JTS	COMP_SEAL-SW	AS NOTED

STATE OF NEW HAMPSHIRE
DEPARTMENT OF TRANSPORTATION * BUREAU OF BRIDGE DESIGN

TOWN | BRIDGE NO. | STATE PROJECT

LOCATION

COMPRESSION SEAL EXPANSION JOINT

BRIDGE SHEET OF FILE NUMBER

REVISIONS AFTER PROPOSAL		BY	DATE		BY	DATE
	DESIGNED	NHDOT	9/87	CHECKED	NHDOT	9/87
	DRAWN	PJP	4/13	CHECKED	ABH	4/13
	QUANTITIES			CHECKED		
	ISSUE DATE	9/87	FEDERAL PROJECT NO.		SHEET NO.	TOTAL SHEETS
	REV. DATE	5/2/16				