Chapter 2

PROJECT DEVELOPMENT

Introduction

This chapter describes how a project advances through the different stages of design from its inception to the point it is archived after being constructed. Included is the coordination of activities, reviews, checkpoints, public involvement, and project management. The Project Development Flow chart (Appendix 2-1) explains the process of developing the "typical" project. Special instructions, checklists, and procedures are included as Appendices following this chapter.

The key to efficient systematic project development is good coordination. Nearly all projects have a diverse and often complex series of factors that need to be addressed to effectively complete the process. Chapter 1 identifies the different groups within the NHDOT that may be involved with the project.

Highway Classifications and Programs

Highways are classified for various purposes and sometimes the classifications may overlap. Highways have legal, system, program eligibility, and functional classifications.

State Highway System Classification

There are six (6) main classes of state highways as described in the *New Hampshire Revised Statutes Annotated* (1) (RSA 229:5) and are summarized as follows:

Class I All existing or proposed highways on the primary state highway system except those portions within the compact sections of the following cities and towns,

Amherst	Franklin	Manchester
Bedford	Goffstown	Merrimack
Berlin	Hampton	Milford
Claremont	Hanover	Nashua
Concord	Hudson	Pelham
Derry	Keene	Portsmouth
Dover	Laconia	Rochester
Durham	Lebanon	Salem
Exeter	Londonderry	Somersworth

The portions of turnpikes and the national system of interstate and defense highways within these areas are also Class I highways.

Class II All existing or proposed highways on the secondary state highway system except those portions within the compact sections of the cities and towns listed under Class I highways.

Class III — All recreational roads leading to and within state reservations designated by the Legislature.

Class III-a — New boating access highways from any existing highway to any public water. All Class III-a highways are limited access facilities and all provisions of limited access highways apply, except that the Executive Director of the Fish and Game Department has the same authority for class III-a highways as the Commissioner of the NHDOT has for other limited access facilities. No access is granted to abutters for Class III-a highways.

Class IV — All highways within the compact sections of the cities and town listed under Class I highways.

Class V — All other traveled highways which the town has the duty to maintain regularly and are known as town roads.

Class VI — All other existing public ways which include all highways discontinued as open highways and made subject to gates and bars except as described under Class III-a highways and all town roads not maintained in suitable condition for travel for 5 successive years or more.

NOTES: The compact section of a city or town is the territory within such city or town where the frontage on any highway is, in the opinion of the Commissioner of the NHDOT, mainly occupied by dwellings or buildings in which people live or business is conducted throughout the year and not seasonally. These highways are maintained by the municipalities rather than the NHDOT.

Certain Class V access roads leading from Class I and Class II highways (described in RSA 230:7) to a recreational road on a State Park or recreational area are classified as Class II highways.

All Class I and Class II highways and all highways included in the national system of interstate highways are laid out by a Commission appointed by the Governor and Council.

The legal classification provides the basis in law for implementing State projects and managing the road transportation system. Maps showing these classifications are available in the Bureau of Transportation Planning.

The State Highway classifications above provide for the establishment of the State Highway System and the assignment of legal designations to the lesser roads. The State Highway System includes designated roads within the system such as Interstate, Turnpike, Primary, and Secondary. This identification is linked to the jurisdictional function of the road and is used for management, fund allocation, and a class of Federal project participation.

Federal Aid System Classification

There are two major Federal Aid System classifications, primarily established for project funding purposes:

- National Highway System (NHS) -- Interstate, Turnpike, and major arterials.

- Surface Transportation Program (STP) -- major and minor arterials and major collector roads.

Maps showing the NHS system are available in the Bureau of Transportation Planning.

Federal Aid Functional Classification

There are three (3) broad classifications of functional roads based upon mobility or type of public service provided by the road:

- Arterial
- Collector roads
- Local roads

The functional system classification is shown on maps prepared by the Bureau of Transportation Planning.

Projects, as well as road systems, are identified by the particular program under which they are funded. Note the explanation under Project Numbering System, this chapter and relevant information in the Estimate Guidelines, Appendix 13-3 (subsection Appendix A).

Federal Aid Programs

The *Federal-Aid Policy Guide* (12) is the source for descriptions of Federal assistance programs, individually funded by Congress and administered through the State's highway organization.

There are three major groups of programs:

1. System Related
2. Nationally Oriented
3. Special Purpose

The types of projects associated which each of these are listed next.

Systems Related

Programs include National Highway System (NHS) and Surface Transportation Program (STP).

Nationally Oriented

Programs include Bridge, Rail-Highway Crossings, Safer Off-System, Congestion Mitigation and Air Quality (CMAQ), Transportation Enhancement (TE), Public Lands Highways, Forest Highways, Public Transportation, Scenic Highways, and State Planning and Research (SPR).

Special Purpose

Programs include Domestic and Foreign, and focus on specific geographical areas or particular projects. Emergency Relief and Innovative Projects are included in this category.

There are many individually eligible activities funded within the program categories. The *Federal Aid Policy Guide* (12) is the reference for programs and eligible activities.

Project Numbering System

Projects are identified by letters and numbers that appear on the front sheet of the plans to indicate program, sequence, location, series of project type, or appropriation code for the work. An accounting charge number is also assigned for accumulating costs associated with the project, but it does not appear in the plan or Proposal.

The Estimate Guidelines (Appendix 13-3) in Chapter 13 describes the funding categories and appropriation codes used in Federal Project numbers.

A Request for Project Authorization (Project Slip) (Appendix 2-2) is processed at the start of a project in order to assign a State and a Federal Project Number. These numbers are assigned by Budget and Finance and Project Programming, respectively.

The Project Development Process

The project development process is systematic and may be complex as reflected by the number and diversity of the factors that often are involved. Input is received and considered throughout the process from the public both on an individual and group basis; local, state, and federal government; and private organizations, and reflected accordingly. The degree of involvement varies from project to project.

There are many steps involved from the conception of a project to the completion of construction and subsequent archiving of project materials. The following is an explanation of the Project Development Flow chart (Appendix 2-1) which outlines the main steps commonly encountered:

1. ***Receive Notice to Proceed:*** The project usually begins by being added to the State's Ten Year Transportation Improvement Program. A memorandum from the Director of Project Development may also initiate a project. A Request for Project Authorization (Project Slip)(Appendix 2-2) is processed through the Project Programming section of the Bureau of Transportation Planning followed by a Project Agreement Estimate to authorize funds for Preliminary Engineering and for Right-of-Way incidentals. Planning studies or other preliminary work may have been performed prior to the official Notice to Proceed and should be consulted.

2. ***Evaluate available plans and data:*** The magnitude of information available at this time may vary. All data should be listed and checked to identify additional need. Data and their sources may include:
    - Corridor studies and other planning information, typically available through the Bureau of Transportation Planning;
    - Plans of old projects, typically available through Records Section or otherwise through the Maintenance District Office;
    - USGS topographic maps, available through the Records Section;

- Aerial photographic enlargements and/or photogrammetry, usually found through the Cartography Section of Transportation Planning;
- Utility plans such as water and/or sewer plans from the municipality; and,
- Developers' site plans from the municipality or the Maintenance District.

All data should be identified and indexed to assess what additional data is required. The Section Chief(s) or other individuals having prior involvement with the project should be consulted to ensure that no information is overlooked. A thorough evaluation of the available information should be made prior to conducting a field reconnaissance of the site.

3. ***Field review the site:*** A review of the site "in the field" determines if the available information is accurate, adequate, or if additional information is required. It also allows examining the existing condition in the context of the larger surrounding area. Maps and other field orientation plans should be taken on the review. The site should be extensively photographed and videotaped for future reference.

   The Chief of Preliminary Design or a Preliminary Design Supervisor and the designer would typically go on this review, the results of which would be documented in a written report. Also, the Request for Initial Environmental Review Form (Appendix 2-7A)(a.k.a. "Orange Sheet") is submitted to the Administrator of the Bureau of Environment which,in turn, would allow a representative to attend the field revew.

4. ***Initiate Environmental Review Process:*** After the field review, the Bureau of Environment representative will assess at a concept level what environmental factors need to be considered and investigated further.

5. ***Request information:*** A variety of information is requested at this stage of the project. In all requests for additional information, be as specific as possible. Provide a time frame that the information is needed, background, and plans if possible to enable the supporting groups to supply the information efficiently. All requests should be authorized by the Chief of the Section or a Supervisor within the Section. The information typically requested is as follows:

   5.1 Traffic data is requested from the Systems Analysis Section of the Bureau of Transportation Planning using the appropriate form (Appendix 2-3). Route the request through the Chief of Final Design or the Chief of Consultant Design for comment and through other Sections or bureaus, as appropriate, prior to the actual submission.

   5.2 Accident statistics are requested from the Systems Analysis Section of the Bureau of Transportation Planning using the appropriate form (Appendix 2-4).

   5.3 Unless adequate data is available for the conceptual studies, topographical and existing detail information is requested from the Survey Office of the Design Services Section of the Bureau of Highway Design. A Survey Request (Appendix 2-5) and accompanying plan showing the area of coverage required is submitted to the Chief of Design Services and a target completion date is agreed to. Large areas of coverage are coordinated through the Chief of

Design Services and sometimes surveyed through aerial photogrammetry. Copies of the request are provided to the Bureau of Environment to allow the flagging of wetlands. The Bureau of Right-of-Way supplies a list of property owners in the project area for the Survey Section to notify prior to beginning their work.

When adequate plan data is available, the following additional requests may be made:

5.4 Right-of-Way abstracting is requested from the Bureau of Right-of-Way to determine from public records the property ownership of real estate, metes and bounds description, and any other rights to the property that may be affected by the project. Typically an Abstracting Request form (Appendix 10-2) along with a reproducible base plan of the existing survey detail constitutes this request. See Chapter 10 for further information.

5.5 Information on existing utilities and railroads is requested from the Design Services Section through the Utilities Engineer. The Utility Request form (Appendix 9-2) plus a number of prints (determined by the Utilities Engineer) of the survey base detail plan make up this request. The information returned will include a description of the utilities, their approximate location, ownership, kind, and size of the utilities occupying the project area.

5.6 A roadway profile control elevation is requested from the Bureau of Bridge Design for projects that involve construction or replacement of a bridge over water. The Bureau of Bridge Design provides a minimum elevation for the desired clearance over the design flood based on a preliminary hydraulic analysis and structure depth predicated on an assumed span length.

5.7 Comments from the appropriate Highway Maintenance District are requested by sending a print of the survey base detail plan, brief project description, and a memo to the District Engineer. The information returned will typically include any known issues such as erosion, drainage, drifting snow, and other problems that have been observed.

5.8 On large projects or ones that have readily identifiable soils problems, specific geotechnical reconnaissance may be requested. Special prior approval for any extensive geotechnical investigation, prior to receiving Design Approval, is required from FHWA (federally funded projects only) (see Step 30 for additional information regarding Design Approval.) The request for geotechnical investigation is made to the Bureau of Materials and Research. The Design Services Section supplies a list of known utilities and the Bureau of Right-of-Way supplies a list of property owners within the area that are required for notification in advance of the explorations.

6. ***Process Survey Data:*** Typically, the Plan Preparation (Plan Prep) Section of Highway Design will process and field verify the data gathered by the Survey Section in CAD/D and will develop a base detail plan and 3-dimensional topographic model for design use. Horizontal alignments are also developed but are for reference only.

7. ***Conduct Environmental Review:*** Project review and coordination with the Bureau of Environment is essential and must occur to insure that all environmental issues are properly addressed. An environmental coordinator is assigned to each project by the Bureau of Environment. The Environmental Coordinator will review the project with other groups and agencies, primarily through the monthly Natural Resource Agencies and Cultural Resources Agencies meetings. Typically a project will be presented at these meetings at least twice, once during the initial conceptual study development (using an existing detail plan and describing the general intent of the work) and again after the NHDOT review and FHWA review, if appropriate, are complete. Often, there is a preferred alternative at this point and details of the impacts to environmental resources can be discussed. Refer to the Bureau of Environment *Environmental Documentation Manual* (2) for a detailed description of the environmental review process including documentation and classification requirements.

8. ***Develop Conceptual Alternatives:*** Conceptual studies are preliminary design options prepared from the information previously requested. Identifiable engineering problems, safety concerns, and environmental issues are considered, along with established design criteria, in developing studies and alternatives. The study technique and requirements vary with the type of project. The results should be adequate to make preliminary recommendations and cost estimates, begin the Engineering Report (Appendix 2-6), and to provide the basis for coordination and subsequent approvals. In order to continue the environmental review process, the Request for Environmental Documentation form (a.k.a. "Green Sheet")(Appendix 2-7) is submitted to the Administrator of the Bureau of Environment at this point.

9. ***Review and Coordinate with other Bureaus and Sections:*** Review major issues such as constructability, maintenance of traffic, proposed bridge criteria including any temporary bridges, proposed retaining wall or steepened slope criteria, Right-of-Way involvement, potential utility relocations, traffic signal placement, major overhead signs, and drainage. Before arranging the Commissioner's Office review, the Partial Engineering Consideration Check List (Appendix 2-8) should be reviewed.

10. ***Conduct Bureau Review:*** Review the conceptual studies with the Chief of Preliminary Design, Highway Design Administrator, and the Assistant Director of Project Development. Modify the conceptual studies as appropriate.

11. ***Request Additional Survey:*** Additional survey coverage is requested, if needed, to fully depict all impacts of the proposed design on the Public Hearing Plan. Additional survey may be required at any point during the design to supplement and/or clarify the data available.

12. ***Review with the Commissioner's Office:*** At this meeting, the significant details of the project are explained to the Commissioner and the Commissioner's staff. Direction is given for any modifications to the concept, development of additional alternatives, or to proceed to the review by FHWA, if required.

13. ***Review with FHWA:*** The requirement for FHWA review is determined when a federal number is assigned to the project and is tied to both the Environmental process and type

of highway on which the work is proposed. The purpose of the FHWA review is to receive FHWA concurrence of the proposed design.

14. ***Establish the Environmental Classification:*** After completion of the preliminary environmental studies, the Bureau of Environment recommends the classification of the project to FHWA based on the anticipated significance of the environmental impacts as follows:

    - Class I — Significant Environmental Impacts
    - Class II — No Significant Environmental Impacts
    - Class III — Uncertain Environmental Impacts

    The classification determines the level of environmental documentation and identifies the resultant process required (See Step 23).

15. ***Conduct Pre-Hearing Utilities Review:*** A review is held with the Utility Coordinator, Final or Consultant Design and Construction representatives, and those utilities within the project area to inform the utilities of the proposed work and time frames, and to receive their input.

16. ***Conduct Pre-Hearing Final Design Review:*** A meeting is held with the Final Design or Consultant Design Section to initiate a conceptual level drainage design and an assessment of any traffic control and construction issues to the level necessary to assess requirements for Right-of-Way and easements. A preliminary timeline for advertising is also established. See the Pre-Hearing Final Design Guidelines (Appendix 2-9) for details.

17. ***Review with the Regional Planning Commission (RPC):*** This informal meeting with the Regional Planning Commission will describe the proposed improvements to be presented to the Public Officials.

18. ***Conduct the Public Officials Meeting:*** This meeting is held with the Public Officials to present the project and solicit their input. See Step 20 regarding the Public Informational Meeting for additional information.

19. ***Review with the Commissioner's Office:*** At this meeting, the input received at the Public Officials Meeting is reviewed with the Commissioner and the Commissioner's staff. Direction is given for any modifications to the concept or development of additional alternatives, if required, prior to proceeding to the Public Informational Meeting.

20. ***Conduct the Public Informational Meeting:*** This meeting is held to inform the general public of the project and to solicit input.

    The Public Officials and the Public Informational meetings are part of the Public Participation process. Occasionally these meetings are combined into a single meeting if the project is small in scope or has relatively minor or no impacts to abutting properties.

    The design may be adjusted and new studies performed as a result of the information gathered during the public participation process. Depending upon the complexities and circumstances associated with a particular improvement, the Project Manager or Lead

Person may reintroduce the project into the public participation process, if appropriate, to ensure that the public's concerns are addressed.

21. ***Review with the Commissioner's Office:*** At this meeting, the input received at the Public Informational Meeting is reviewed with the Commissioner and the Commissioner's staff. Direction is given for any modifications to the concept or development of additional alternatives, if required, prior to proceeding to the Public Hearing.

22. ***Prepare Public Hearing Plan:*** All data is evaluated, designs are refined, and the Public Hearing Plan and Hearing "hand-outs" are prepared at this stage. (Refer to the color legend (Appendix 2-10) when preparing Hearing Plans and other presentation plans.) A typical Hearing package includes an aerial photograph of the area, the Hearing base plan and profile(s), and the Hearing "hand-outs".

23. ***Prepare Environmental Documentation:*** All environmental documentation is prepared by the Bureau of Environment or a consultant. The Bureau of Highway Design provides any technical assistance required.

    For major projects determined to have significant environmental impacts (Class I), design alternatives will be developed through the NEPA process and a Draft Environmental Impact Statement (Draft (EIS)) is prepared.

    A 4(f) Evaluation is prepared for projects that require impacts to land from a publicly-owned park, recreational area, wildlife refuge, or to any significant historic site. These properties are protected by Section 4(f) of the DOT Act and, in the case of historic sites, Section 106 of the Historic Preservation Act.

    When FHWA is in agreement with the scope and content, a distribution of the Draft or Combined Draft EIS / 4(f) Evaluation is made no later than the publication of the first Hearing notice and at least 30 days prior to the Public Hearing. Distribution is made to all federal, state, and local agencies that may have jurisdiction by law and interested groups and individuals.

    For major projects determined to have no significant effects to the quality of the human and / or natural environment, a Draft Environmental Assessment (EA) or Combined Draft EA / 4(f) Evaluation is prepared documenting that finding. The documentation is based on information developed during the environmental and engineering studies and the public participation process. Environmental Assessments are required for all major projects for which an EIS is not necessary. These documents are not circulated but are available for public inspection.

    For Categorical Exclusions (Class II), a brief Environmental Study or Environmental Classification Summary is prepared. This document is not circulated, but is available for public inspection.

    Refer to the Bureau of Environment *Environmental Documentation Manual* for a detailed description of the environmental documentation requirements.

24. ***Conduct the Public Hearing:*** A Public Hearing is required when eminent domain procedures are to be used. A Public Hearing is usually held for all projects determined to

have a substantial social, economic, or environmental effect; require the acquisition of significant amounts of property (monetarily or in area); have adverse effects on abutting properties; or change the layout or function of connecting roads or streets.

A Public Hearing is usually not required if all work can be done within the existing Right-of-Way (including construction operations) or a tentative settlement can be reached in advance with any impacted abutters.

See Chapter 10, Right-of-Way, for additional information regarding Public Hearing Procedures.

25. ***Confirm Environmental Classification:*** After evaluation of the Public Hearing comments and reports of any standing committees, a final layout is selected and classification is confirmed.

    For major projects on which a Draft EIS was prepared and sustained as a result of the Public Hearing and review comments, work is then initiated on the preparation of the Final EIS. For major projects on which a Draft EA was prepared and sustained, work proceeds towards the preparation of a Final EA.

    If significant environmental impacts are identified which were not previously considered or not previously deemed important, FHWA may rescind a Draft EA and request the preparation of an EIS. Another Hearing will not be held for the sole purpose of presenting a Draft EIS, but the Draft EIS will be circulated for comment.

26. ***Address Hearing Comments:*** The Project Manager or Lead Person prepares a "Report of the Commissioner" that addresses all pertinent comments and requests made at the Public Hearing, and defines the NHDOT resolution of these issues. The report is signed by the Commissioner. The Hearing Commission or Special Committee appointed by the Governor and Council must approve the NHDOT resolution of issues.

27. ***Request Geotechnical Report:*** A formal request for the Geotechnical Report will be sent to the Bureau of Materials and Research after coordinating with other involved Bureaus (typically Bridge Design). The specifics of the request are included in Appendix 2-11. Note that certain survey information must be established in the field to allow the field explorations to be conducted and referenced.

    If circumstances arise that require additional geotechnical information, a supplemental request may be made, as necessary.

28. ***Prepare Final Environmental Report:*** When a Final EIS or combined EIS / 4(f) Evaluation is prepared, it will include a copy of all substantive comments received on the draft statement and the consideration and disposition of comments raised at the Public Hearing and on the draft document.

    The required copies of the Final EIS are forwarded to FHWA for approval. FHWA prepares a Record of Decision on the final EIS describing the action.

    Upon approval by FHWA, a Final EIS or combined Final EIS / 4 (f) Evaluation is mailed to all agencies and individuals who offered comments on the draft statement or requested

a copy and notices are published in a local area wide newspaper stating that the Final EIS is approved and available for review.

When a Final EA or combined Final EA / 4(f) Evaluation is prepared after the Public Hearing, it will include a summary and disposition of substantive comments raised at the hearing. Concurrence of FHWA is solicited and when FHWA is in agreement with the scope and content, it adopts the Final EA as a Finding of No Significant Impact (FONSI) and the preparation of final plans begins.

The Final EA or FONSI is not circulated for comments but is available for review at the NHDOT and FHWA offices in Concord.

29. ***Conduct the Project Management Team Turnover Meeting:*** This is the formal turnover of a project from the Preliminary Design Section to the Final Design or Consultant Design Section as well as a briefing for the other bureaus involved. Preliminary Design will prepare a revised geometric base plan including any approved post-hearing changes to the design layout along with the finalized Engineering Report. Environmental commitments and right-of-way and utility impacts will be discussed, the construction time determination (Appendix 2-12) will be addressed, and a target schedule of critical dates for Final Design should be discussed.

30. ***Receive Design Approval:*** Design approval by FHWA is only necessary on overview projects. No separate line and grade review is necessary. The receipt of environmental clearance by FHWA constitutes Design Approval on Federally Exempt projects. Non-federal projects do not have a formal Design Approval process.

31. ***Begin Final Design:*** This phase of project development is mainly performed by the Final Design or Consultant Design Section. Even though a project is turned over, Preliminary Design will typically be consulted during the Final Design development of the project and may be requested to study certain aspects, as necessary.

    This phase cannot begin on FHWA overview projects until Design Approval is received. On other projects or when Design Approval is received, the Final Design team or Consultant develops the Right-of-Way Plans necessary for acquisition of property and/or property rights and the Plans, Specifications, and Estimate (PS & E) to allow the project to advertise for bids and subsequent construction.

32. ***Prepare Pre-Preliminary Submission:*** This phase of final design is particularly important in Consultant Design projects in which the final design consultant was not involved in the Preliminary Design (pre-Public Hearing) or when the preliminary design was prepared on a large scale, requiring further refinement in the final design. It provides the mechanism for making adjustments to the line and grade and for a new consultant to review and understand the preliminary design and become acquainted with the Engineering Report and environmental documents, evaluate design alternatives, and conduct "working sessions" with the NHDOT to discuss key design issues. Typically, this submission includes general plans (roll plans), profiles, and complete original ground cross-sections for the study alternatives with top line template at critical sections. The specific requirements for this submission are included in the consultant agreement for each project. This phase is considered to represent 15-20% completion of the final

design. For further information, see the sections of Article 1 of the Sample Master Agreement (Appendix 2-13).

33. ***Prepare Preliminary Submission:*** This phase further develops the selected alternative from the Pre-Preliminary Submission by "locking in" the horizontal and vertical alignments and completing top line template for all sections. During this phase, the designer develops conceptual drainage designs (identification of existing and proposed contributing watershed areas, location of closed system outfalls, and preliminary sizing of major culverts), and traffic control/construction phasing scenarios. A key component of the conceptual drainage design is the consideration of permanent and temporary erosion control measures and Best Management Practices (BMP's). This phase is considered to represent approximately 30% completion of the final design and includes:

    - Finalizing the horizontal and vertical alignments;
    - Developing the final template including superelevation computations and profiles;
    - Developing retaining wall profiles;
    - Developing driveway and walkway designs;
    - Verifying sight lines, storage lengths, acceleration /deceleration lengths, tapers, and turning movements;
    - Developing conceptual drainage design;
    - Designing guardrail and curbing locations;
    - Verifying utilities and plotting underground utilities (if available) on plans and sections; and,
    - Verifying construction and detour profiles controls with the Bureau of Bridge Design.

    For further information, see the sections of Article 1 of the Sample Master Agreement (Appendix 2-13).

34. ***Receive Geotechnical Report:*** The information received in the Geotechnical Report is reflected on the plans and sections and in the construction sequence. For additional information, see Appendix 2-11.

35. ***Prepare Slope and Drain Submission:*** This phase of development includes:

    - Finalizing driveway and walkway designs;
    - Finalizing slope lines;
    - Finalizing drainage design (pipe sizes and outlets);
    - Finalizing stormwater treatment designs;
    - Designing permanent erosion control measures;
    - Evaluating design options to avoid or minimize utility relocations;
    - Reviewing temporary and permanent easements with the Bureau of Construction;
    - Reviewing the Right-of-Way layout with the Bureau of Right-of-Way; and,
    - Analyzing and reviewing traffic control during construction with the Bureau of Construction and, if applicable, with the Bureau of Bridge Design.

    For further information regarding Consultant Design projects, see the sections of Article 1 of the Sample Master Agreement (Appendix 2-13).

A field review with all pertinent information analyzed in advance must be conducted on every project to ensure an appropriate design unless specifically approved by the Final Design or Consultant Design Supervisor. Plan review alone is rarely sufficient to assess the design.

Copies of this submission should be sent to Construction, Highway Maintenance, and / or Turnpikes, and the municipality, if applicable, for their comments.

A meeting is held with the Team Leader / Consultant Supervisor to review the submission. Subsequently, a meeting is held with the Final or Senior Consultant Design Supervisor to review the submission. Comments from these meetings are incorporated in the plans and sections.

At this phase, the following information is also requested:

- Additional Wetland delineation;
- Pavement Recommendation;
- Verification of Right-of-Way abstracting; and,
- Verification of existing utilities.

36. ***Design Wetland Mitigation:*** Typically, projects with any significant wetland impacts require mitigation by creation, enhancement, restoration, or preservation of wetlands, conservation easement, or some combination thereof. Depending on the scope and complexity of the mitigation, the wetland mitigation plans may be developed by the Final Design Team or Consultant, the Environmental Coordinator, or by a Consultant retained by the Bureau of Environment. This effort usually begins at the Slope and Drain Phase and is ongoing, with review by various environmental agencies, through to the PS&E phase.

    For additional information, see the *Wetland Mitigation Plans Consultant Requirements Manual* (3).

37. ***Prepare NH Wetlands Bureau Application:*** The Wetlands Permit application is prepared following the Slope and Drain Phase when the proposed drainage is known and the resultant impacts are established. If bridge construction is involved, coordinate with the Bureau of Bridge Design to ensure that all impacts are shown. The time frame for the Wetlands Bureau to process the application is typically from five (5)to six (6) months but can be as much as a year and should, therefore, be factored into the design timeline. This process is in two parts:

    - A preliminary set of plans with an application, submitted to the Bureau of Environment and the Hydraulics Engineer for review, and,
    - A final set with application incorporating any comments received and resubmitted to the Bureau of Environment and the Hydraulics Engineer

    For specific information in preparing the application and plans, refer to the NHDOT *Permit Process Manual for NH Wetlands Bureau Permit* (4), the Wetlands Plan checklist (Appendix 2-14), and the Wetlands Bureau (Permit) Application Guidelines (Appendix 2-15).

38. ***Prepare US Army Corps of Engineers (ACOE)/NH Wetlands Bureau Application:*** The determination of whether an individual ACOE Permit is required can be found in the US Army Corps of Engineers, New England Division, *Guide for Permit Applicants* (26). An individual ACOE permit is required when the proposed work involves impacts to 3 or more acres (0.82 or more hectares) of "waterway and/or wetlands fill including secondary impacts" or when, at the discretion of the ACOE, there are "any project based concerns for the aquatic environment or for any other factor of the public interest".

39. ***Process the Preliminary Right-of-Way Plans Submission:*** This submission incorporates the results of the final Slope and Drain Phase. (A detailed description of the contents of Right-of-Way Plans is in Chapter 10.) The initial submission of Right-of Way Plans includes preliminary plans forwarded to the Bureau of Right-of-Way for their review and comment.

40. ***Review the Preliminary Right-of-Way Plans Submission:*** After the Bureau of Right-of-Way has reviewed the Preliminary Submission, a meeting is held to discuss resultant comments.

41. ***Process the Right-of-Way Plans Submission:*** Modifications resulting from the Preliminary Right-of-Way Plans submission are incorporated into the plans along with the final calculation of Right-of-Way acquisitions and easements. The formal submission of Right-of-Way Plans is then made.

42. ***Process the Revised Right-of-Way Plans Submission:*** As the project develops, revisions are commonly necessary to the Right-of-Way Plans due to various factors that develop during the Final Design process including changes in property ownership, negotiations with property owners, and adjustments to required easements.

43. ***Request Utility Relocations:*** Typically, the proposed work effects existing utilities and requires their relocation. Plans showing the pavement layout, drainage layout (no notes), existing detail including utilities, slope lines, and Right-of-Way layout, along with cross sections showing top line template and new drainage and retaining walls are sent to the Utility Coordinator for this purpose with an accompanying memo including the desired return date. Also, a list of potential conflicts, critical relocation areas, special traffic control needs, and other relevant data should be provided. If a railroad is involved, it is essential to start the coordination effort as soon as appropriate plans are available since this is often a time consuming process and can add substantially to the cost of construction.

    Impacts to utilities facilities have the potential of requiring changes to the design of the project and the construction schedule.

44. ***Request Landscaping Plan:*** On some projects, landscaping is included at the request of the community, as part of environmental commitments, for the overall aesthetics of the project, or as a negotiated Right-of-Way agreement. Coordinate with the Roadside Development designer and discuss the intent and extent of the required landscaping. The Highway designer provides the necessary base plans for the Roadside Development designer's use in developing the landscaping plan.

45. ***Review Estimate:*** A 50% estimate is only prepared if a significant change in scope of work has occurred since the conceptual estimate was done or some major expense has been added to the project. This allows evaluation of funding and any resultant schedule changes.

46. ***Receive Preliminary Bridge Submission:*** This submission includes a plan and elevation of the bridge work, including limits of channel work. This allows evaluation and coordination of the roadway and bridge work including:

    - Matches to horizontal and vertical alignments;
    - Horizontal and vertical clearances;
    - Matches to roadway sections including superelevation;
    - Placement of curbing and drainage structures;
    - Construction access; and,
    - Traffic control.

47. ***Receive Preliminary Utility Relocation Plans:*** The Utility Coordinator receives and analyzes the plans and meets with the Final Design Team Leader or Consultant Design reviewer to discuss the relocations. Those relocations determined to be acceptable are added to the Construction plans and sections as appropriate. Those needing revision are returned to the utility with comments.

48. ***Conduct Preliminary Plan Coordination Meeting:*** This meeting is scheduled at approximately the 60% completion phase of the project. The basic engineering of the project must be finished for the meeting to be effective, although many details are still not finalized. Topics of discussion include utility involvement, construction time determination (Appendix 2-12) and construction phasing, traffic control, proposed drainage, environmental constraints, and Right-of-Way considerations. Appendix 2-16 includes the notice for this meeting.

49. ***Request Lighting Design:*** Plans showing the pavement layout, drainage layout (no notes), traffic signals, existing detail including utilities, slope lines, and Right-of-Way layout are sent to the Utility Coordinator for use in reviewing the existing lighting and designing any new lighting (permanent or temporary) with an accompanying memo specifying the requested return date.

50. ***Request Signal Design:*** Plans showing the pavement layout, traffic data, drainage layout (no notes), existing detail including utilities, slope lines, and Right-of-Way layout, and pertinent cross sections, are sent to the Bureau of Traffic for their use in designing the traffic signals along with an accompanying memo specifying the requested return date.

51. ***Request Permanent Signing and Pavement Markings Design:*** Plans showing the pavement layout, drainage layout (no notes), existing detail including utilities, slope lines, and Right-of-Way layout are sent to the Bureau of Traffic for their use in designing the permanent signing and pavement marking along with an accompanying memo specifying the requested return date.

52. ***Receive the Lighting Design:*** The lighting design is added to the plans and the relevant Force Account Work by the Utility and the work to be done by the Contractor under bid items are reflected in the estimate.

53. ***Prepare a draft Prosecution of Work (POW) and Traffic Control Plan (TCP):*** Final Design or Consultant Design Section usually writes these documents with input from the Design Services and Roadside Development Sections, and the Bureaus of Construction, Bridge Design, Materials and Research, Environment, and Right-of-Way. (See Chapter 13 for further information.)

54. ***Receive Signal Design:*** The signal design is reviewed by the Final Design Team Leader or the Consultant Design reviewer and added to the plans.

55. ***Receive Permanent Signing and Pavement Markings Design:*** The permanent signing and pavement marking design is reviewed by the Final Design Team Leader or the Consultant Design reviewer and added to the plans.

56. ***Receive Final Utility Relocation Plans:*** The Utility Coordinator receives and analyzes the plans and meets with the Final Design Team Leader or Consultant Design reviewer to discuss the relocation plans. If acceptable, the utility relocations are added to the construction plans and sections, and the costs, if any, are included in the estimate. Those needing revision are resubmitted to the utility with comments.

57. ***Receive Landscaping Plan:*** The landscaping design is reviewed by the Final Design Team Leader or Consultant Design reviewer. If it complies with the intent, the landscaping plans are added to the construction plans.

58. ***Request Construction Signs and Warning Devices Package:*** A copy of any traffic control plans, the (written) TCP, and the general plans are submitted to the Bureau of Traffic for their use in preparing the Construction Signs and Warning Devices package including an estimated cost, along with an accompanying memo which specifies the requested return date.

59. ***Receive Construction Signs and Warning Devices:*** The construction signs and warning devices package is received by the Final Design Team Leader or the Consultant Design reviewer and, after review with Construction and modifications as necessary and / or certain information is added to the plans.

60. ***Submit Information to the Specifications Engineer:*** Submit the following information:

    - Draft Prosecution of Work
    - Draft Traffic Control Plan
    - Draft Special Provisions from Consultants or Municipalities
    - Description of Work that requires Special Provisions, Special Attentions, or Supplemental Specifications
    - Consecutive Item List

61. ***Conduct Federal Energy Regulatory Commission (FERC) Process:*** As described in Chapter 10, when there is involvement with a hydro-electric facility or natural gas pipeline, certain steps are performed by the Bureau of Right-of-Way with technical support by the Bureau of Highway Design and often the Bureau of Bridge Design to meet regulatory requirements.

62. ***Prepare Preliminary PS&E Estimate:*** The format, content, and routing of the estimate is covered in the Estimate Guidelines, Chapter 13 (Appendix 13-3). A copy of the

Consecutive Item List must be given to the Specifications Engineer to allow identification of any Special Provisions.

63. ***Submit Preliminary PS&E:*** This submission represents a draft of the PS&E submission. All major items will be computed and checked. Plans and cross sections will be substantially complete with minor exceptions. A full set of the plans and sections, along with a draft Prosecution of Work, draft Traffic Control Plan, any unusual Special Provisions, and the Preliminary PS&E Estimate, are reviewed by the Final Design Supervisor or the Consultant Design reviewer. One additional copy is forwarded to Construction, Highway Maintenance, and to FHWA (for overview projects only).

64. ***Submit Requisition for Printing to the Print Shop:*** Appendix 2-17 shows a sample Printing Requisition, completed at the Preliminary PS&E phase, to assist the Print Shop in scheduling the printing of the plans and Proposal for bidding. A notebook is kept in the Administrative Section of Highway Design for assigning requisition numbers.

65. ***Review the Preliminary PS&E with Construction:*** This meeting is to discuss any input that Construction may have to ensure that the project is both biddable and constructable. Comments received will be evaluated and addressed appropriately.

66. ***Review the Preliminary PS&E with FHWA (Overview Projects Only):*** This meeting is to review comments or questions that FHWA may have about the project and to ensure that the proposed work is consistent with accepted design practices, Federal regulations, and that environmental considerations have been satisfactorily addressed. FHWA will usually formalize their comments in a letter and, if acceptable, will approve the submission. The NHDOT will provide a written response to their concerns.

67. ***Conduct Pre-Advertisement Coordination Meeting:*** The purpose of this meeting is to turn over the project to the Bureau of Construction. The project is presented in detail along with the Prosecution of Work, Traffic Control Plan, and a draft PS&E Estimate. Each involved Bureau and/or Section will comment on their specific work, ranging from an in depth presentation to simply stating that the necessary documents or work is done or pending. All major topics are discussed, especially construction sequence and construction time determination, construction constraints, utility considerations including relocations, traffic control, environmental considerations, Right-of-Way considerations, special design features such as retaining walls, fences, parking lots, saving trees, and other issues unique to the project. Although comments are anticipated, and will need to be addressed, for this meeting to be effective, all major issues must have been resolved in advance. A copy of the PS&E Check List (included in Appendix 13-3) is distributed at this meeting to those involved with providing materials listed (excluding DBE Goals) with the return date clearly stated. Appendix 2-18 includes the notice for this meeting.

68. ***Conduct "3 - Way Check":*** This is a quality assurance step to ensure that the information included on the summary of quantities, plans, and sections agree.

69. ***Compare Estimate Versus the Summaries ("Apples and Oranges"):*** This is the final quality assurance step prior to advertising that compares the sums of the item numbers and quantities shown in the summaries with those shown in the estimate.

70. ***Conduct the Meeting to Brief the Director of Project Development:*** Conduct this meeting at least one week prior to sending the plans, sections, and Proposal to the Print Shop. The purpose is to brief the Commissioner's Staff about the scope of the project and items of major significance, such as design constraints, commitments, construction schedule, traffic control, and status of environmental permits and Right-of-Way clearance. (See Appendix 2-19 for a sample of the meeting notice.)

71. ***Submit Information to the Specifications Engineer:*** Submit information in final form as outlined in Appendix 13-4.

72. ***Submit Plans to Print Shop:*** The final plans are submitted to the Print Shop along with a Distribution of Plans list (Appendix 2-20). For large projects, submit the plans at least three (3) weeks prior to the advertising date. On smaller projects, two (2) weeks may suffice, depending on their workload. For overview projects, one (1) set of half scale plans and sections must be forwarded to FHWA on the Tuesday, one week before the advertising date.

73. ***Prepare and Route PS&E Estimate:*** The format, content, and routing of the estimate is covered in the Estimate Guidelines, Chapter 13 (Appendix 13-3). A copy of the signed estimate must be given to the Specifications Engineer to allow determination of DBE goals.

74. ***Receive ACOE / NH Wetlands Bureau Permit(s):*** The permit(s) is received by the Bureau of Environment and forwarded to Highway Design to include in the Proposal. The permit(s) includes conditions to be met during construction that may restrict the methods or timing of construction. It is important that the Permit be included in the Proposal since the conditions stated may affect the bids.

75. ***Receive the Right-of-Way Certificate:*** As described in Chapter 10, the Bureau of Right-of-Way prepares a certificate documenting that the Right-of-Way necessary for the project has been acquired to allow the Contractor to proceed with construction.

76. ***Submit the PS&E for Review within the NHDOT:*** This stage represents near final completion of the PS&E. It will include the plans, draft Proposal and the PS&E Estimate. The Proposal is the compilation of documents that will be forwarded to the Bureau of Administration and Contracts for finalizing; however, it will not include the Information Report and the Bid Schedule at this point. Appendix 13-4 outlines the required material for the Proposal. One copy of the draft Proposal and PS&E Estimate is given to the Final Design Supervisor or the Consultant Design reviewer and one copy to Construction for review along with a set of plans and sections for reference.

77. ***Incorporate Review Comments from Departmental Review:*** Comments from this review are evaluated and revisions are made as necessary. The Proposal is then submitted to the Bureau of Administration and Contracts for preparation of the final version for bidding. Submit the Proposal one week in advance of the advertising date for Exempt projects and two weeks in advance for Overview projects. When the Proposal is finalized, the Final Design Team Leader or the Consultant Design reviewer will be asked by the Contracts Administration Office to compare the PS&E estimate with the Information Report and Bid Schedule to ensure that the item numbers and quantities agree.

78. ***Submit PS&E to FHWA (Overview Projects):*** This submission includes the half scale plans, Proposal, PS&E Estimate, Right-of-Way Certificate, Utility Certificate, and DBE Goals. This material is forwarded to the Bureau of Transportation Planning on or before the Friday two weeks before the advertising date. Other documents are provided by Budget and Finance and the complete submission is forwarded to FHWA by the Bureau of Transportation Planning on Tuesday, one week before the advertising date. In certain instances of constrained schedules and with prior approval of the Section Chief and FHWA, full size plans may be acceptable for initial submission to FHWA with the half scale set forwarded when available.

79. ***Submit PS&E to FHWA (Exempt Projects):*** This submission includes a front sheet of the half scale plans, PS&E Estimate, Right-of-Way Certificate, and DBE Goals. This material is forwarded to the Bureau of Transportation Planning on or before the Friday two weeks before the advertising date and, combined with Budget and Finance documents, forwarded to FHWA on Tuesday one week before the advertising date.

80. ***Advertise the Project:*** All projects are publicly advertised in the Manchester Union Leader, normally appearing in Thursday's edition, although, for scheduling purposes, the advertising date is considered as the previous Tuesday. The Bureau of Administration and Contracts also maintains a mailing list for project advertising. A three (3) week bid preparation period is normally required for all projects. Plans and Proposals are available for purchase through the Administration and Contracts Bureau. Questions from prospective bidders are directed to the Project Manager or Lead Person who will assess if the information included in the plans and Proposal adequately addresses their concerns or whether an addendum is necessary to provide qualifying information.

81. ***Distribute Plans:*** The Print Shop will notify the Final Design Team Leader or the Consultant Design reviewer that the plans have been printed for distribution. This individual will get the plans and have letters of transmittal and any other necessary documents prepared as noted in the Distribution of Plans List (Appendix 2-20). The assembled materials will then be given to the Records Section of Highway Design for delivery or mailing.

82. ***Prepare Quantity Workbook for The Bureau of Construction:*** Organize the quantity calculations, insert a copy into a notebook, and forward it to the Bureau of Construction. (See Chapter 8 for further information.)

83. ***Prepare Addendum:*** In certain instances, errors or omissions are made or revisions are necessary in the PS & E as advertised. Additionally, bidders may ask questions that require clarification of intent, which may effect bids. For these reasons, it may be necessary to issue an addendum. The acceptable time frame is ten (10) calendar days, but not less than seven (7) calendar days, prior to the bid opening date. If this is not practical, the advertising date may need to be delayed to provide enough time for prospective bidders to consider the information. (See Chapter 13 for further information.)

84. ***Conduct the Bid Opening:*** The bid documents are collected in a sealed container at the NHDOT and the bids are publicly opened and read at a stated date and time (usually on Thursday at 2:00 p.m.). All bidders' total bid amounts are announced with the apparent low bidder identified.

85. ***Process Project Agreement Estimate (PAE) Based on Bids:*** The "body" of the estimate reflecting bid prices is generated by the Bureau of Information Technology Services. The Final Design Team Leader or Consultant Design reviewer revises the front pages of this estimate to show revised construction totals and changes, if necessary, to the amounts shown for Preliminary Engineering and Right-of-Way. The Project Agreement Estimate is required as part of the Award of Bid resolution for action by the Governor and Council and for submission to FHWA. FHWA approval (for Federal Aid Projects) authorizes the construction funds for Federal Participation.

86. ***Coordination of Design during Construction:*** Conditions discovered in the field during construction may prompt questions about why a design was done a specific way and whether it could be changed. The Final Design Team Leader or Consultant Design reviewer must be available for consultation to ensure that unacceptable changes are not made inadvertently. It also promotes better understanding of the necessary integration of construction considerations into the design.

    The Design Services and Roadside Design Sections of Highway Design, and the Bureaus of Environment, Bridge Design, and Materials and Research are typically involved throughout the construction phase, as appropriate.

87. ***Conduct Field Review of Constructed Project:*** When the project is near completion, it is often beneficial for those involved with the design to meet with the Contract Administrator in the field to review the project from the construction viewpoint and assess the project's strong points and weaknesses in an effort to improve future designs. A report of the meeting is prepared by the Designer.

88. ***File Materials:*** Correspondence and plans other than the actual Construction Plans and the Right-of-Way Plans are sorted after project completion. Necessary information is retained and permanently filed at the Records Management and Archives Division of the Secretary of State's Office. The Construction Plans and the Right Of Way Plans are filed in the Records Section of Highway Design. Information unnecessary to retain is discarded.

G:\BUR34\MANUAL\CHAPT2.DOC

APPENDIX LIST

2-1 Project Development Flow Chart
2-2 Request for Project Authorization
2-3 Request for Traffic Forecasts
2-4 Request for Accident Study
2-5 Survey Request
2-6 (Sample) Engineering Report
2-7 Request for Environmental Review
2-7A Request for Initial Environmental Review
2-8 (Partial) Engineering Considerations Check List
2-9 Pre-Hearing Final Design Review Guidelines
2-10 Legend
2-11 (Sample) Geotechnical Report for Highway Projects
2-12 Construction Contract Time Determination Process
2-13 (Sample) Consultant Agreement Article I
2-14 Wetland Plans Check List
2-15 Wetlands Bureau Permit Application Guidelines
2-16 (60%) Preliminary Plan Coordination Meeting Notice
2-17 Request for Printing/Reproduction
2-18 Pre-Advertisement Coordination Meeting Notice
2-19 Meeting Notice to Brief the Director of Project Development
2-20 Distribution of Plans

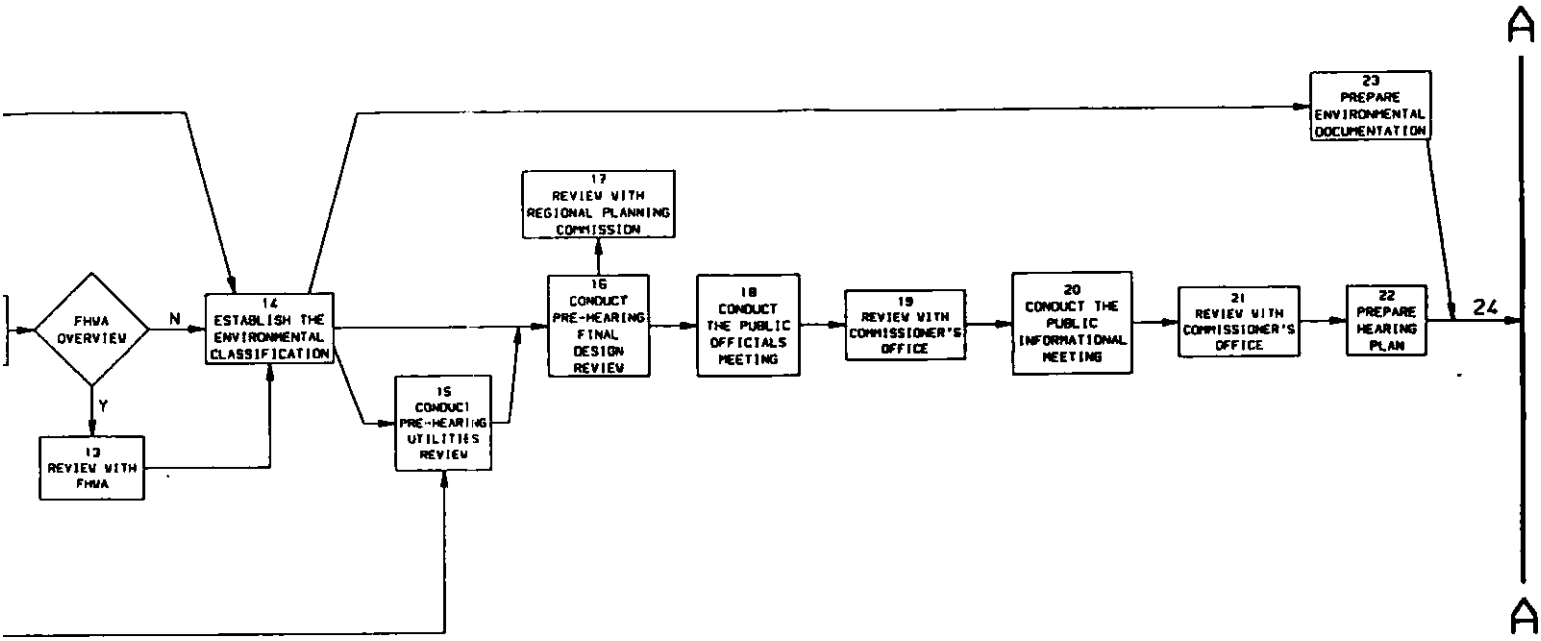
A
23
PREPARE
ENVIRONMENTAL
DOCUMENTATION
17
REVIEW WITH
REGIONAL PLANNING
COMMISSION
FHWA
OVERVIEW
N
14
ESTABLISH THE
ENVIRONMENTAL
CLASSIFICATION
16
CONDUCT
PRE-HEARING
FINAL
DESIGN
REVIEW
18
CONDUCT
THE PUBLIC
OFFICIALS
MEETING
19
REVIEW WITH
COMMISSIONER'S
OFFICE
20
CONDUCT THE
PUBLIC
INFORMATIONAL
MEETING
21
REVIEW WITH
COMMISSIONER'S
OFFICE
22
PREPARE
HEARING
PLAN
24
Y
13
REVIEW WITH
FHWA
15
CONDUCT
PRE-HEARING
UTILITIES
REVIEW
A

'MENT FLOW CHART

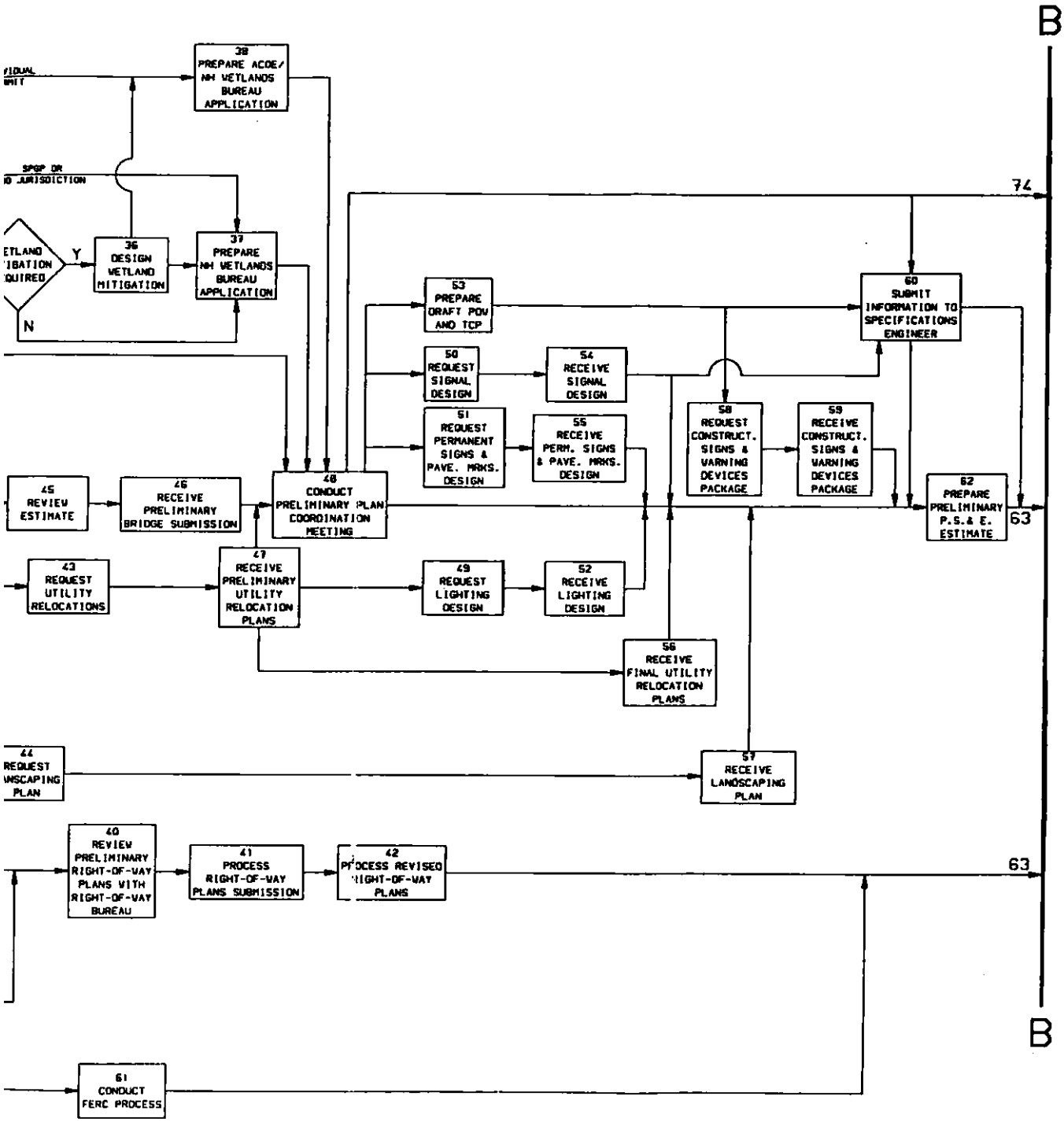

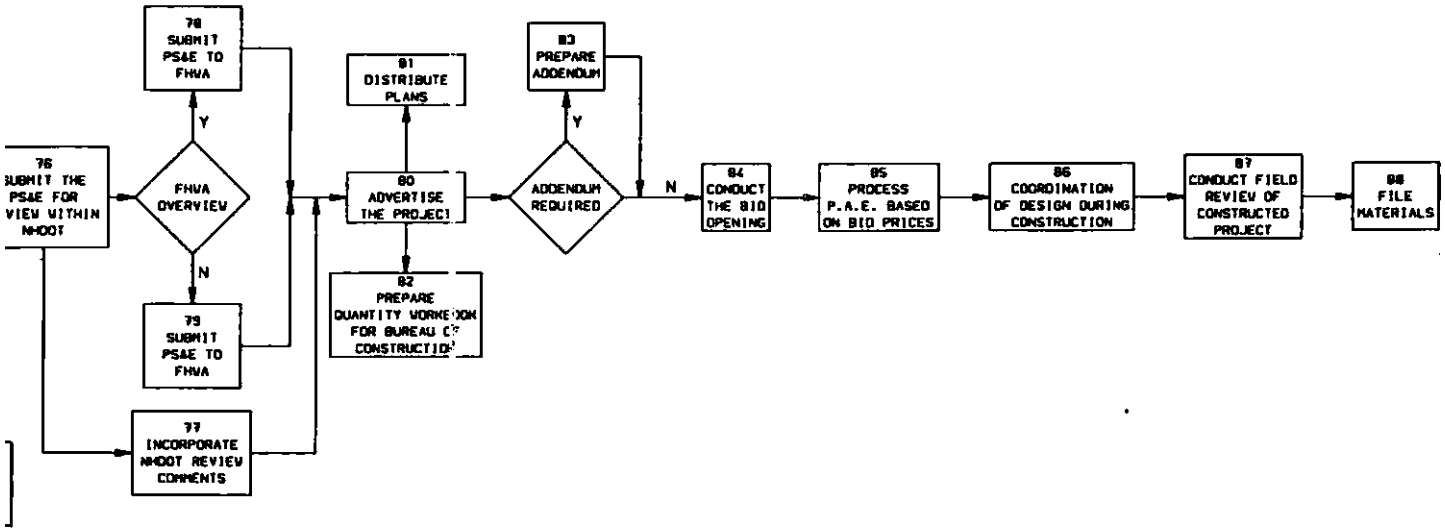
76
SUBMIT THE
PS&E FOR
VIEW WITHIN
NHDOT
FHWA
OVERVIEW
Y
N
78
SUBMIT
PS&E TO
FHWA
79
SUBMIT
PS&E TO
FHWA
77
INCORPORATE
NHDOT REVIEW
COMMENTS
80
ADVERTISE
THE PROJECT
81
DISTRIBUTE
PLANS
82
PREPARE
QUANTITY WORKBOOK
FOR BUREAU OF
CONSTRUCTION
ADDENDUM
REQUIRED
Y
N
83
PREPARE
ADDENDUM
84
CONDUCT
THE BID
OPENING
85
PROCESS
P.A.E. BASED
ON BID PRICES
86
COORDINATION
OF DESIGN DURING
CONSTRUCTION
87
CONDUCT FIELD
REVIEW OF
CONSTRUCTED
PROJECT
88
FILE
MATERIALS

PROJECT SLIP -- EXAMPLE

STATE OF NEW HAMPSHIRE
DEPARTMENT OF TRANSPORTATION

Assigned by the Project Manager

Request For
PROJECT AUTHORIZATION

Assigned by the Bureau of Budget & Finance

PROJECT NAME: _____ STATE NO: _____

ORIGINAL PROJECT SLIP DATE: _____ REVISION DATE: _____

REQUESTED BY: _____ BUREAU: _____

PROJECT TYPE: FEDERAL AID ☐ NON-FEDERAL AID ☐ PROJECT DEV. ☐
FORCE ACCOUNT ☐ or CONTRACT ☐

APPROX. ADVERTISE DATE: _____

Assigned by Project Programming

DISTRICT: _____ ORGANIZATION CODES: _____

DOES THIS PROJECT ENCOMPASS ANY BRIDGES? (Y/N): ☐ HOW MANY: ☐

FED/OTHER NO. _____

PROGRAM: _____

W/C ☐100 PE ☐200 CONST ☐OTHER

SERIES ☐300 ROW ☐800 P.W. & ADMIN.

DESCRIPTION IN ORDER BY: ROUTE NUMBER, LOCATION, NATURE OF WORK

APPROVED BY: _____ LEAD PERSON: _____

PROGRAM ESTIMATE: PE_____ ROW_____ CONST_____

REASON FOR THE PROJECT:(FIRST EVENT ON PROJECT EVENT HISTORY SCREEN)

PROJECT INITIATED BY:_____

PROJECT PROGRAMMING: YES ☐ PROJ.PROG. APPROVAL:_____ NO ☐

PROJECT SLIP AUTHORIZED: _____

PROJECT AUTHORIZATION ISSUED: _____ DATE: INIT: _____

NEW HAMPSHIRE DEPARTMENT OF TRANSPORTATION
BUREAU OF TRANSPORTATION PLANNING - SYSTEMS ANALYSIS

REQUEST FOR TRAFFIC FORECASTS

CIRCULATE BEFORE SUBMITTAL

☐ Prel. Design: _____ ☐ Environment: _____ ☐ Proj. Mgr.: _____

If appropriate: _____ ☐ Bridge Design: _____ ☐ Mun. Hwys.: _____

☐ Final Design: _____ ☐ Bur. Traffic: _____ ☐ District: _____

REQUEST INFORMATION

DATE SUBMITTED: _____ DATE REQUESTED: _____

SUBMITTED BY: _____ SECTION: _____ PHONE: _____

SEND COPIES OF FORECASTS TO: _____, _____, _____

PROJECT INFORMATION

CITY/TOWN: _____ ROUTE(S): _____

STATE PROJECT #: _____ FEDERAL PROJECT #: _____

PUBLIC HEARING FY: _____ ADVERTISING FY: _____

PROJECT DESCRIPTION: _____

TRAFFIC FORECASTS/INFORMATION REQUESTED

STUDY AREA: Attach map of project area with street names. Circle all intersections/interchanges/driveways for which turn volumes are required, and mark locations for ADL or other information needed.

YEARS FOR TRAFFIC INFO. (fill in only those required):

EXISTING YEAR _____ OPENING YEAR _____ FUTURE YEAR (1) _____

FUTURE YEAR (2) _____ FUTURE YEAR (3) _____ FUTURE YEAR (4) _____

TYPES OF TRAFFIC INFO. (check only those required):

☐ AADT ☐ DHV, DDHV ☐ AWD AM&PM PEAK HOUR ☐ SATURDAY PEAK HOUR

☐ AWD 8TH HIGH HOUR (for signal warrants)

☐ SUMMER AADT (for air quality analysis)

☐ AWD AVG. OF 8 HIGHEST CONSECUTIVE HOURS (for air quality analysis)

☐ AWD HOUR (other than DHV) WITH HIGHEST # TRUCKS (for noise analysis)

☐ MEAN YEAR ADL estimates: location: _____ # lanes _____
location: _____ # lanes _____

☐ % TRUCKS IN ADT, DHV: locations: _____

☐ 24 HOUR COUNTS (where available) (specify months, locations):

_____

☐ OTHER (e.g. weave volumes, monthly variations, special conditions):

_____

_____

_____

NEW HAMPSHIRE DEPARTMENT OF TRANSPORTATION
BUREAU OF TRANSPORTATION PLANNING-SYSTEMS ANALYSIS

REQUEST FOR ACCIDENT STUDY

REQUESTED BY:

Name: _____
Bureau: _____
Phone: _____

DATE OF REQUEST _____

DATE REQUIRED _____
If A.S.A.P., please state reason _____
_____

PURPOSE OF STUDY: _____
_____

DURATION OF STUDY PERIOD: (Mo/Yr) _____ **to (Mo/Yr)** _____
If information requested dates back prior to 1988, only the accident location is available.
Vehicle and collision information is available as of 1993.

LOCATION OF STUDY (Attach map with street names, route numbers, or prominent landmarks) _____
_____

Project Name and Project Number Associated with Study: _____

Please check boxes associated with specific conditions or parameters of study requested.
If request is for number of total accidents only, please check Box J.

- **A** ☐ Type of Accident
- **B** ☐ Fixed Object Struck
- **C** ☐ Location of First Harmful Event
- **D** ☐ Road Alignment
- **E** ☐ Road Condition
- **F** ☐ Surface Condition
- **G** ☐ Light
- **H** ☐ Weather
- **I** ☐ Vehicle & Collision Information
- **J** ☐ Number of Accidents only
- **K** ☐ Other - please specify _____

Any additional information provided will ensure a more accurate study.

Below this line for Transportation Planning Use only

Study Number _____

Date in _____
Date out _____

Computer Study Numbers _____
_____
_____

Computer Strip Numbers _____
_____
_____

DEPARTMENT OF TRANSPORTATION
SURVEY REQUEST

PROJECT NAME _____.

STATE PROJECT NUMBER _____.

DESCRIPTION OF SURVEY REQUEST _____.
_____.
_____.
_____.
_____.
_____.
_____.

REQUESTING BUREAU/SECTION _____.

SURVEY REQUESTED BY _____. DATE _____.

COMPLETION DATE REQUESTED _____.

SURVEY REQUEST TO BE RETURNED TO _____.

APPROVED BY _____.

REMARKS _____.
_____.
_____.

FOR SURVEY USE ONLY

REQUEST APPROVED BY _____.DATE _____.

ESTIMATED COMPLETION DATE _____.

ESTIMATED CREWDAYS _____.

SURVEY SUPERVISOR _____.

PRIMARY CREW CHIEF _____.

TOTAL STATION _____.CONVENTIONAL _____.

REMARKS _____.
_____.
_____.
_____.
_____.
_____.

ACTUAL START DATE _____.

ACTUAL COMPLETION DATE _____.

TWO COPIES TO SURVEY

STATE OF NEW HAMPSHIRE
INTER-DEPARTMENT COMMUNICATION

DATE:

FROM: Chief of Preliminary Design **AT (OFFICE):** Bureau of Highway Design

SUBJECT: **Project Name**
Federal Number
State Number
(One line description)

SAMPLE

TO: Name, P.E.
Chief Project Manager

THRU: Name, P.E.
Administrator

ATTN: Name, P.E.
Project Manager

ENGINEERING REPORT

I. INTRODUCTION

Brief statement describing project location and intent.

II. EXISTING CONDITIONS

Brief statements outlining the existing conditions

A., B., C., etc. - *Separate headings for each roadway*

1. Roadway - *List predominant roadway width, shoulder width, surface type, year constructed.*
2. Alignment - *List minimum horizontal radius.*
3. Profile - *List maximum grade, minimum crest and sag vertical curve K values.*
4. Posted Speed - X kmh (X mph)

5. Bridge - *List summary of bridge data.*

III. PROBLEMS AND SOLUTIONS

Brief statements describing the existing problems and the recommended solutions.

A. Problem:

Solution:

B. Problem:

Solution:

IV. DESIGN RECOMMENDATIONS AND CONSIDERATIONS

The headings below are typical general categories. Other project-specific headings may be necessary.

A. Design Speed and Superelevation:

List the design speed and superelevation design chart for each roadway. Note any unusual superelevation assumptions.

B. Typical Section:

List the proposed typical section width (lanes, shoulders, sidewalks, etc.), and assumed structural section design for each roadway.

ROAD	TYPE	TYPICAL	TRAVEL WAY	SHOULDERS	STRUCTURAL SECTION
Road name or #	Class No.	i.e. 3.6-3.0-3.0	X mm	X mm	X mm Sand X mm Gravel X mm Cr. Gravel

Note the status of the structural section review by Materials and Research.

C. Bridge:

Provide a brief summation of the conceptual design.

D. Drainage and Stormwater Treatment:

Provide a brief summation of the conceptual design.

E. Environmental:

Briefly summarize all known considerations, impacts, and mitigation.

1. Wetlands:

2. Historic:

3. Etc.:

F. Right of Way:

Summarize the intent of the Right-of-Way provisions for the project. Note any commitments or particularly sensitive issues.

G. Other Alternatives:

Briefly summarize other designs that had been considered and why they were not selected.

H. Maintenance of Traffic:

Summarize specific criteria used in formulating the concept.

I. Utilities:

Briefly summarize known utility facilities and involvement and any ramifications or special considerations.

J. Accidents:

Briefly summarize data but direct reader to accident report.

K. Traffic:

Briefly summarize data but direct reader to the traffic report.

L. Survey:

Briefly summarize the type and extent of available data. Note additional survey needs, if any.

M. Soils:

State the status of the geotechnical request and briefly summarize any known geotechnical conditions that would require consideration.

N. Earthwork:

Note approximate quantities of common excavation, rock excavation, and embankment-in-place.

O. Preliminary Estimate:

Provide the status of the estimate and state the estimated project costs (construction, engineering, and right-of-way).

V. AVAILABLE MATERIALS

List available materials.

A. X-scale CAD/D detail of the project area.
B. MOSS-generated contours, profiles and cross-sections of Road name/ Rte. Number.
C. Preliminary design base plan, profile and cross sections.
D. Right of way abstract plan.
E. Photographs.
F. Etc.

Drafted:_____
XXX
Preliminary Design Section

Noted:_____
XXX
Chief of Preliminary Design

cc: Administrator of Bureau of Highway Design
Project Manager
Administrator of Bureau of Environment
Chief of Consultant or Final Design Section
Chief of Special Services Section
Author

G:\BUR34\MANUAL\ENGRPT.DOC

- Pavement and select materials quantities based on pavement structure design.
- Signal cost (provided by the Bureau of Traffic).
- Maintenance of traffic (consult with the Bureau of Construction).
- Storm water treatment and erosion control (consult with the Bureau of Construction).
- Utility Force Accounts (i.e. Railroad) (provided by the Special Services Section).
- Preliminary Engineering and Construction Engineering.
- Unit prices.

C. Other Considerations.

1) Traffic control, especially temp. widenings, phases, detours, etc.

2) Proposed easements, any special items, and constructability concerns, reviewed the with Bureau of Construction prior to dry run.

3) Guardrail design

4) Pedestrian accommodation (sidewalks, crosswalks, ramps).

5) Matches to walkways, stairs, etc.

6) Time allowed for work versus the project schedule (time).

7) ADA considerations.

REQUEST FOR ENVIRONMENTAL DOCUMENTATION

(submitted to BOE when scope is set and formal documentation is needed)

Project Name :_____ Project Type :_____
Federal No. :_____ Route Name/No. :_____
State No. :_____ Bridge No. :_____
Lead Person :_____ Plans Attached_____
Tentative Hearing Date :_____ Tentative Advertising Date :_____

Please note the availability (or expected date of availability) of the following. If currently available, please attach to this form.

Traffic Data :_____ Accident Data :_____
TE/CMAQ Application :_____ Other (specify) :_____

Proposed Action : *(include project specifics : geometric modifications, roadway typicals, bridge descriptions, lane usage, traffic signal installations, right-of-way involvement, etc.)*

Need : *(include as appropriate : condition of pavement, geometric deficiencies, bridge deficiencies (with sufficiency ratings) safety deficiencies, local or political sentiment, project origin, accident history, capacity problems, etc.)*

Constraint Considerations : *(list known engineering, environmental and political constraints : wetlands, historic structures, legislation, public lands, etc.)*

Alternatives to the Proposal : *(list alternatives, including : the no-build option, the reconstruction option, and the Department's selection preference.)*

Requested By :_____ Bureau :

Date :

(attach additional sheets, as necessary)

g:\bur34\manual\gmsht1.doc

Appendix 2-7A

REQUEST FOR INITIAL ENVIRONMENTAL REVIEW

(submitted to BOE at project initiation)

Project Name :_____ Project Type :_____
Federal No. :_____ Route Name/No. :_____
State No. :_____ Bridge No. :_____
Lead Person :_____ Length :_____
Location Map Attached : Yes_____No_____ Plans Available : Yes_____No_____

Location; Scope of Work :_____

Special Considerations Associated With This Project (accelerated schedule, previously identified constraints, etc.) :_____

Requested By :_____ Bureau :_____
Date :_____

Bureau of Environment

Bureau of Environment Reviewer : _____ Date : _____

g:\bur34\manual\oransh.doc

STATE OF NEW HAMPSHIRE
DEPARTMENT OF TRANSPORTATION

BUREAU OF HIGHWAY DESIGN

"(PARTIAL) ENGINEERING CONSIDERATIONS CHECK LIST"

Project: _____
Fed. No.: _____
State No.: _____

(1) Design Speed

(2) Adaptability to future planning

- a. Alignment
- b. Profile

(3) Typicals

(4) Pavement layout

- a. Turning lane warrants
- b. Additional lanes at railroad crossings
- c. Truck lanes (check warrants, capacity reduction & relation to % of passing sight distance)
- d. Other

(5) Earthwork balance -- on stage construction projects show breakdown for both

(6) Drainage considerations

- a. Undercut brooks
- b. In flood plan areas -- high-water effects on design
- c. Do we have a major culvert requiring "Bridge Design"
- d. Stormwater treatment

(7) Guard Rail

- a. Types
- b. Effects on sight at intersection
- c. Transitioning at structures
- d. Other

(8) Curbing

(9) Right-of-Way

(10) Utilities

a. Names and type of action required
b. Sight at railroad crossings
c. Other

(11) Signals

(12) Lighting

a. Interchanges
b. Deceleration lanes
c. Intersections
d. Other

(13) Sidewalk and sidewalk ramp requirements

(14) Location of schools, bus routes, fire stations, and the like

(15) Soils considerations

(16) Environmental ramifications

a. Wetlands, permit required?
b. Historic properties, 4 (f)
c. 6 (f) properties
d. Other

(17) Estimate

(18) Airports (see Chapter 3)

(19) Sources of water supply

(20) Past high-water marks and anticipated design year high-water elevations

(21) Review corridor-study if available

(22) Detours/Maintenance of Traffic

(23) Other

PRE-HEARING FINAL DESIGN REVIEW GUIDELINES

This review may be completed in steps as the preliminary design is finalized. For example, prior to the Public Information Meeting, drainage easements may be very conceptual and will progress to a preliminary easement prior to the hearing due to time constraints with other projects. Typically the review contains the following elements:

I. Review the Horizontal and Vertical layout:

- Proposed match into existing center of road alignment(s) and old ground elevations.
- Vertical curve placements within horizontal curves or approaching intersections.
- Requirement for sight lines easements or additional clearing
- Traffic turning movements.
- Template as plotted on cross sections.
- Check drive matches.
- Consistency of typical with other projects (i.e., a nearby or immediately adjacent project built a 3.6-3.0-3.0 typical and this project is a 3.6-1.2-1.2 typical. Why?)
- Use of curbing or special back curbing to limit or minimize impacts.
- Slope lines including roundings.
- 2% platforms on intersecting roadways.

II. Drainage:

- Field review (if appropriate) - This is just a preliminary review, not the actual drainage design field review.
- Closed drainage system requires CB every 90 m minimum. Sags, low points may need more than one CB, and steep grades with curbing and 1.5 m shoulders may require additional basins which will increase construction cost.
- Remember "snow curb" basins in sags.
- Proposed easements should be a little larger than needed (They can be reduced later). Include permanent erosion control design.

- Are temporary erosion control and/or temporary construction easements needed?
- Verify that Maintenance District has been contacted for any known problems.

III. Utilities (analyzed by the Design Services Section)

A. Permanent relocations.

B. Temporary relocations.

C. Significant impacts (time complexity/sophistication or expense).

D. Proximity to Airports.

IV. Trees, Landscaping (Coordinated with the Roadside Development Section)

A. Is what's called for to be saved:

1) appropriate to be saved?

2) able to be saved using practical construction techniques?

V. General:

A. Draft Engineering Report.

- List of all deficiencies, even the ones that will not be addressed.
- Impacts to underground utilities.
- Special ROW considerations
- Environmental issues (Historic, contaminated soil or water, archaeological, mitigation, wetland permit).
- Impacts to floodplain and floodway.
- Pavement design.
- Special considerations to be included in the estimate.
- Proposed retaining walls: Type? Buildable? Appropriate right of way and/or easements provided.

B. Review Preliminary Estimate.

- Verify that old plans have been reviewed for any possible ledge or muck.
- Drainage percentage - if closed system in an urban area, 25% - 30% may be more appropriate.
- Quantity earthwork, pavement, and other large cost items.
- Uniformed officers and flaggers.

- Pavement and select materials quantities based on pavement structure design.
- Signal cost (provided by the Bureau of Traffic).
- Maintenance of traffic (consult with the Bureau of Construction).
- Storm water treatment and erosion control (consult with the Bureau of Construction).
- Utility Force Accounts (i.e. Railroad) (provided by the Special Services Section).
- Preliminary Engineering and Construction Engineering.
- Unit prices.

C. Other Considerations.

1) Traffic control, especially temp. widenings, phases, detours, etc.
2) Proposed easements, any special items, and constructability concerns, reviewed the with Bureau of Construction prior to dry run.
3) Guardrail design
4) Pedestrian accommodation (sidewalks, crosswalks, ramps).
5) Matches to walkways, stairs, etc.
6) Time allowed for work versus the project schedule (time).
7) ADA considerations.

LEGEND

LF8NT00	Bituminous Concrete Pavement of Proposed Roadway PRISMACOLOR CANARY YELLOW #916
LF6NT00	Shoulder of Proposed Roadway PRISMACOLOR DARK BROWN #946
LF60NT00	Proposed Roadway Traffic Islands PRISMACOLOR TRUE GREEN #910
LF33NT00	Proposed Sidewalk PRISMACOLOR PURPLE #931
LF53NT00	Access Points to Proposed Roadway (Drives, etc.) PRISMACOLOR ORANGE #918
LF42NT00	Approximate Limit of Slope Work and Landscaping PRISMACOLOR SPRING GREEN #913
L7M/L42M	Removal of Existing Pavement Outside of Slope Work PRISMACOLOR COOL GREY 50% #1063/SPRING GREEN #913
LF7NT50	Existing Pavement (Roadways, Drives, Sidewalks, etc.) PRISMACOLOR COOL GREY 50% #1063
LHEARGRN	Existing Tree and/or Brush Line PRISMACOLOR DARK GREEN #908
LHEARBLU	Water (Rivers, Streams, Lakes, Ponds, Swamps, etc.) PRISMACOLOR TRUE BLUE #903
LHEARRED	Buildings PRISMACOLOR CARMINE RED #926
L3M/L0M	Buildings To Be Removed PRISMACOLOR CARMINE RED #926
LFNR5	Wetlands PRISMACOLOR TRUE BLUE #903
LDOT31	Property Lines PATTERN TAPE BLACK 1/16"
L19	State, County, City, and Town Lines FLOURESCENT TAPE ORANGE 1/32"
LDOT62	Existing Easement Lines PATTERN TAPE ORANGE 1/32"
L62	Proposed Easement Lines GLOSS TAPE ORANGE 1/16"
LDOT27	Existing R.O.W. (Right Of Way) PATTERN TAPE BLUE 1/32"
L27	Proposed R.O.W. MATTE OR CREPE TAPE BLUE 1/16"
LDOT23	Existing C.A.R.O.W. (Controlled Access) PATTERN TAPE GREEN 1/32"
L23	Proposed C.A.R.O.W. MATTE OR CREPE TAPE GREEN 1/16"
LDOT63	Existing L.A.R.O.W. (Limited Access) PATTERN TAPE RED 1/32"
L63	Proposed L.A.R.O.W. MATTE OR CREPE TAPE RED 1/16"
LF21NT50	Existing Tree Fill PRISMACOLOR DARK GREEN #908
LF11NT50	Building Fill PRISMACOLOR CARMINE RED #926
LF25NT50	Water Fill PRISMACOLOR TRUE BLUE #903
LF15NT50	Shadow
LSTONEF or LSTONEC	Stone Fill
LF14NT00/ LF27NT00	Bridge Removal

PREPARED BY
NEW HAMPSHIRE DEPARTMENT OF TRANSPORTATION
HIGHWAY DESIGN BUREAU

DISKA11:[HIGHWAY.H2074M]MISC_HIGHWAY.FGB
DWG = LEGEND REVISION DATE: 05/08/96

Geotechnical Report for Highway Design Projects

revised 07/02/97

1. Timing, Planing, and Scheduling. The geotechnical request is generally submitted after the project turnover meeting. Unless authorized through the project manager, geotechnical field work is not initiated until after the project has design approval. The geotechnical request will then be reviewed by the geotechnical section. Following this review, the geotechnical chief will meet with the project manager to coordinate scheduling of the geotechnical work. At this meeting, the geotechnical chief will advise the project manager of any outstanding issues (e.g. field survey, wetland delineation, etc.) that have not been addressed and which affect the geotechnical work schedule. Once the schedule is established, the geotechnical chief will advise the project manager if changes in the proposed schedule become necessary during the course of the work.

2. Contents of Geotechnical Request for Highway Design Projects. Geotechnical requests for highway projects normally follow design approval, or, in the case of consultants design projects, following approval of preliminary design. The geotechnical request should be addressed to the Geotechnical Chief, Bureau of Materials and Research. The following information should be provided with the request.

   a) Location map or front sheet

   b) Proposed plans, profile, cross sections and typical sections. Cross sections should be provided every 20 meters and should show both the old ground and the approximate finished grade.

   c) In the absence of a construction baseline staked in the field, certain survey information must be established to allow geotechnical explorations to be conducted and located. A plan sheet is to be provided which contains the locations of benchmarks and survey points with corresponding elevations.

   d) Engineering Reports.

   e) All available plans and information concerning soil conditions for existing roadways within the proposed project limits, including existing base course type and thickness, underdrains, cross sections indicating previous muck and bedrock removal limits, muck disposal areas and original topographic information.

   f) Preliminary drainage system locations and depths.

   g) Detention basin locations and depths along with a description of the basin function (retention or detention type).

   h) Preliminary location, height, and footing elevation of proposed retaining structures.

   i) Preliminary mast arm signal base and overhead sign structure locations.

j) Noise barrier wall locations, elevations, and cross sections with design loads and footing spacing.

k) Existing and proposed ROW limits, property lines, and property owners' names and mailing addresses.

l) List of utilities located within project limits including a contact name and phone number for each utility.

m) Any special information, restrictions or work requirements unique to the project.

n) Location and depths of proposed wetland mitigation sites and monitoring well needs. (Should be coordinated with Environmental Bureau).

o) Clear delineation and rating of all wetlands within the project limits and updated information concerning the status of applicable wetland permits. Should define whether the wetland permit includes geotechnical exploration field work. (Should be coordinated with the Environmental Bureau).

p) Status of the hazardous waste assessment of the site. Applicable environmental reports should be provided. In general, geotechnical field work cannot be initiated until the project site has been cleared through the Environmental Bureau.

q) The name of the project and the project number, when preliminary engineering costs are charged to a different project number.

r) Updates, additions, deletions, or other changes to the above information should be provided to the Materials and Research Bureau as they become available so that changes in the geotechnical field work and report can be implemented in an efficient manner.

3. Contents of Geotechnical Reports for Highway Projects. The geotechnical reports for highway projects should generally contain the following information.

a) Site Description

b) Project Description

c) Description of the Subsurface Exploration Program including logs of all subsurface explorations and a plan sheet indicating the exploration locations.

d) Interpretation of subsurface conditions

e) Recommendations for areas and depths of additional sand.

f) Recommendations for longitudinal and transverse underdrains.

g) Recommendations for muck treatment including estimated muck limits plotted on cross sections (provided to Highway Design only), recommended excavation limits, surcharge requirements, settlement periods and any other special requirements for stability and muck treatment.

h) Recommendations for bedrock removal including estimated bedrock limits plotted on cross sections (provided to Highway Design only), pre-split recommendations including holes without explosives, rock slope design and stability concerns, scaling recommendations, special requirements for vibration monitoring and pre-blast surveys, and recommendations for non-explosive methods of bedrock removal.

i) Recommendations for earthwork quantity computations, including boulder content of soil cuts, surface boulder quantity estimates, shrinkage and expansion factors for earth and rock, and depth of topsoil.

j) Recommendations for soil cut and fill slopes including recommended slope angles, surface treatment, drainage measures and reinforcement requirements.

k) Suitability of excavated material for embankment fill and base courses, including suitability of bedrock for crushed stone base courses and evaluation of biotite content of rock used for stone fill in wet environments.

l) Recommendations for embankments constructed over compressible soils, including surcharges, waiting periods, staged construction, geotechnical instrumentation, PV drains, and settlement estimates.

m) Foundation recommendations for overhead sign structures and mast arm signal bases.

n) Foundation recommendations for retaining walls.

o) Foundation recommendations for noise barrier walls.

p) Special provisions for geotechnical specialty items including geotextiles, geomembranes, geogrid reinforcement, PV drains, geotechnical instrumentation, proprietary retaining walls, drilled shaft foundations for noise barrier walls, and vibration monitoring for blasting and compaction operations. Final copies of the special provisions will be provided directly to the Specifications Engineer.

STATE OF NEW HAMPSHIRE
DEPARTMENT OF TRANSPORTATION

CONSTRUCTION CONTRACT TIME DETERMINATION PROCESS

I. PROCEDURE TO DETERMINE CONTRACT TIME

A. Preparation

Estimated contract completion date(s) based on project size, location, urgency, complexity and industry standards shall be the responsibility of the Bureau initiating the work.

B. Review and interaction

Projected contract time allocation shall be estimated at the twenty-nine (29) percent Project Management Turnover meeting and further developed by the Project Management team at the sixty (60) percent Design Completion meeting involving coordination of preliminary plans. Contract time allowance shall be finalized at the ninety (90) percent issues meeting.

II. CONSIDERATIONS FOR DETERMINING CONTRACT TIME

A. Time requirements

Time needed for project completion based on overall quantities.

Time that facility must be opened for public use.

Lead time for speciality items, i.e., signalization, lighting and overhead sign structures.

Time requirements for critical manufacture, i.e., structural steel, bridge rail systems and other bridge speciality items.

Time projections for geotechnical stabilization of work site.

Time required to guarantee survivability of plant materials.

B. Road user impacts and restrictions

Effect of work operations and/or detours on area traffic flows.

Effects of work site on public use during normal and seasonal activities and extended holiday periods dictating abnormal workdays due to peak traffic impacts, i.e., special area events, school schedules, festivals, fairs, etc.

Effects on project productivity due to traffic restrictions requiring:

- Multiple work shifts
- Night work only
- Seasonal and/or weekend supsensions
- Sub-normal workdays (less than 8 hours)
- Incentive/Disincentive clauses for critical projects

C. Evaluation of Contract Date(s)

Assessment of calendar date/days versus working days.

Consideration of calendar date with available working/calendar days allowable within a specified time. i.e., Thirty consecutive days to complete project (or intermediate phase) within a designated three month period.

Analysis of Time/Bid costs affected by Incentive/Disincentive or Bonus/Rental clauses.

III. OTHER FACTORS INFLUENCING CONTRACT TIME and COMPLETION DATE(S)

(1) Proposed advertising period
(2) Available bid opening date
(3) Governor and Council Schedule for approval meetings
(4) Availability of required municipal funding prior to award
(5) Earliest/latest start date anticipated
(6) Schedule of required permit approvals
(7) Right of Way Agreement conditions
(8) Seasonal and/or area weather limitations for specified contract items
(9) Industry standards relative to plant materials
(10) Coordination with area construction activities
(11) Utility relocation schedules and requirements
(12) Geographic location of project affecting productivity rates, i.e., Urban vs. Rural
(13) Proposed type of construction affecting productivity rates, i.e., New vs. Rehabilitation
(14) State and Federal permit conditions and restrictions
(15) Normal productivity rates for major contract items
(16) Bridge construction involvement and waiting periods for concrete placement and curing times
(17) Intra-Agency involvement regarding removal, treatment and disposal of solid and/or hazardous waste
(18) Departmental and municipal maintenance requirements
(19) Contract schedule of work, sequence of operational phases, stage construction, intermediate completion dates and traffic control plan requirements
(20) Other unique design or project site conditions

Submitted by:

Robert W. Sen
Director of Project Development

Date 5-26-92

Approved by:

Commissioner

Date 5/27/92

SAMPLE
ARTICLE I

ARTICLE I - DESCRIPTION OF PROFESSIONAL SERVICES TO BE RENDERED

NOW THEREFORE, in consideration of the undertakings of the parties hereinafter set forth, the DEPARTMENT hereby engages the CONSULTANT, who agrees to render services to the DEPARTMENT that shall include, but not be restricted to, the following items, in accordance with conditions and terms hereinafter set forth:

A. LOCATION AND DESCRIPTION OF PROJECT

Provide a brief description of the proposed project. Include the name of the municipality, route name and number, length of project, and any significant ancillary work (such as side roads, bridge(s), mitigation, etc.).

B. SCOPE OF WORK (GENERAL)

Describe, in detail, the work that will be performed by the Consultant as part of the project.

C. MATERIAL FURNISHED BY THE DEPARTMENT OF TRANSPORTATION

List the material that the Department will provide to the Consultant to facilitate the design effort. This typically will include topographic and detail survey data, right-of-way abstracting, utility locations, and traffic data.

D. WORK SCHEDULE AND PROGRESS REPORTS

The CONSULTANT shall begin performance of the services designated in the Contract promptly upon receipt from the DEPARTMENT of a Notice to Proceed and the material to be

furnished as herein described. The CONSULTANT shall complete these services without delay unless unable to do so for causes not under the CONSULTANT'S control.

The CONSULTANT'S sequence of operation and performance of the work under the terms of this AGREEMENT shall be varied at the direction of the DEPARTMENT to give priority in critical areas so that schedules and other STATE commitments, either present or future, can be met.

The CONSULTANT shall develop an acceptable reporting system capable of indicating project status n at least a monthly basis for all critical activities of the project. Monthly progress reports shall be submitted by the CONSULTANT to the DEPARTMENT, giving the percentage of completion of the work required by this AGREEMENT. These monthly reports shall be received by the DEPARTMENT by the 20th day of each month.

E. SUBMISSION OF REPORTS, PLANS, AND DOCUMENTS

During the prosecution of this AGREEMENT, the CONSULTANT shall prepare and submit to the DEPARTMENT separate submissions as described hereinafter.

The CONSULTANT, with each submission, shall submit a transmittal describing the "design issues" addressed in that submission. In addition, the transmittal shall include anticipated or outstanding issues and the CONSULTANT'S recommendation. All issues shall be noted as to whether the CONSULTANT feels the issue is within the scope of work described in Article I. Meetings between the CONSULTANT and the DEPARTMENT shall be held prior to submissions to discuss design issues and recommendations.

All plan drawings, including size of sheets, lettering, symbols and scale of said drawings, shall conform with the requirements and standards of the DEPARTMENT. Any and all CAD/D-related work completed during the course of this project shall be performed in conformance with the DEPARTMENT's CAD/D Specifications for Data Transfer Procedures, version number 1.0, revised 2/16/95. Final construction plans and final right-of-way plans shall be submitted in

waterproof ink on permanent, archival-quality, double-matte, polyester-base film [.100 mm (.004 in) thick] or silver-halide emulsion ("wash-off") reproduction on polyester-base film [.100 mm (.004 in) thick]. Cross-section sheets shall be submitted on vellum. Construction and right-of-way plans shall be submitted on 559 mm (22 in) x 864 mm (34 in) sheets.

In addition to the final reproducible plans being furnished as noted herein, the CONSULTANT shall provide electronic file copies of all highway and bridge project plan sheets with real STATE plane coordinates, including, but not limited to, final quantity sheets, typicals and detail sheets, general plans and profiles, traffic signal sheets, cross-sections and right-of-way plans. In addition to these plan sheets, an electronic file of the entire project's final design shall be submitted in an "uncut" format showing all design features in a real STATE plane coordinate system unrotated. These final electronic files shall be indexed with file name, description of the contents of the file and project sheet number applicable. All files shall be submitted in conformance with the current DEPARTMENT CAD/D Specifications. Any plans (e.g., quantity summary sheets) produced from a spreadsheet (e.g., Excel, or equivalent) shall be submitted in ASCII file or format suitable to be incorporated into Microsoft Office or the current DEPARTMENT software. The final Special Provision(s) and other documents, as requested, shall be submitted in electronic format (Microsoft Word-compatible). The CONSULTANT shall also be prepared to submit separate electronic files of all alignments, bound locations and other project features as requested in a format acceptable to the DEPARTMENT, throughout the design contract in conformance with the current DEPARTMENT CAD/D Specifications. The CONSULTANT shall also provide a hard copy of all proposed alignments (10-meter (25-foot) minimum station interval and curve control points) with associated STATE plane coordinates (x, y, z).

1. Roadway Design Submissions

The plan submissions for roadway design shall follow the procedures outlined below:

a. Pre-Preliminary Plans - Roadway

This submission, made by the CONSULTANT, shall cover work through the 15 - 20% completion stage. The submission shall consist of the newly created base plan (with all pertinent existing ground detail, utilities, environmental resources, existing right of way and boundary lines, etc. shown) over laid with the conceptual alignments, horizontal layouts, and profiles developed through, and in response to, the Public Hearing and environmental process. During this stage, several "working sessions" (short, conceptual presentations by the CONSULTANT to the DEPARTMENT on work to date, with feedback and direction coming from the DEPARTMENT) are anticipated with the DEPARTMENT. The submission shall include the following:

(1) Information on the alternative solutions proposed by the CONSULTANT. Each respective alternative shall be dimensioned to delineate travel-lane widths and various geometric features and include the average daily traffic (ADT) for both the opening year and design years and the directional design hourly volumes (DDHV) for the design year.

(2) Preliminary level-of-service calculations shall be performed at intersections.

(3) Conceptual traffic control plan for each alternative solution.

(4) Study profiles with old-ground information and proposed grade lines.

(5) Critical cross-sections containing original-ground cross-sections with the top line of template showing finished grades and any other information deemed necessary by the DEPARTMENT to assess the respective alternatives' impact on adjacent properties to support the respective alternatives.

(6) "Study" estimates as appropriate and relevant for use in evaluating the various alternatives.

(7) A narrative shall be furnished describing each alternative design solution's advantages and disadvantages. The CONSULTANT shall make a recommendation with qualifying statements justifying the preferred alternative. The CONSULTANT will be expected to support their design proposal in any issues resulting from review by the DEPARTMENT and Federal agencies with alternate studies and reasonably-itemized study cost comparisons for alternatives.

The DEPARTMENT will review this submission (two sets of roll prints) and any revisions requested shall be made by the CONSULTANT. At this time, the DEPARTMENT will select the alternative for further development.

b. Preliminary Plans - Roadway

Based on a complete review of the material furnished by the DEPARTMENT and developed and/or supplemented by the CONSULTANT, particularly in regard to the proposed design criteria, the predicted traffic, preliminary soil data, expected Best Management Practices for erosion and sedimentation control and water-quality issues, conceptual traffic control and the topography of the project area, the CONSULTANT shall prepare and submit to the DEPARTMENT five sets of roll plans (paper prints 2.5 m to 3.0 m (8 ft. to 10 ft.) in length) (cross sections and other applicable plan sheets may be submitted on cut sheets) showing:

(1) The recommended horizontal and vertical alignment of all necessary roadway construction including local roads.

(2) All roadway cross-sections (20-meters (50-foot) intervals, except at 10-meter (25-foot) intervals in ledge areas) and drive cross-sections which shall be plotted with the top line of the template of the proposed roadway cross-sections shown.

The CONSULTANT shall recognize that typically geotechnical information is not available at this time and therefore this submission may need to be recut and reordered for subsequent submissions when soils/ledge information is made available. Plans addressing significant modifications to private parking areas and accesses shall be developed and used to coordinate with property owners early in the process.

(3) Proposed intersection plans, including proposed traffic lane-use and circulation plans, pavement layouts and major control elements.

(4) Proposed treatment of local roadways affected by the project, along with significant construction appurtenances and other design features.

(5) The alignment (horizontal and vertical) of major detours or construction phases that will have significant implications to the project in the final design. The location and lane use of temporary signals if warranted. Critical cross-sections with superelevations shall be developed and labeled by phases to assist in the assessment of the conceptual traffic control phasing and conceptual location of overhead sign structures.

(6) Conceptual Best Management Practices for erosion and sedimentation control and water-quality issues shall be shown with approximated flows. A presentation and narrative will be required to explain the concept for approval.

(7) Roll plans shall show where match lines are anticipated for future cut sheets.

(8) Preliminary typical sections with top line template.

(9) Proposed limits and recommendations for letting the construction under separate contracts, including cost estimates, areas of overlap, maintenance of traffic, drainage, etc.

(10) Proposed right-of-way layout with bounds.

The following issues shall also be considered in the development of the above-mentioned plans:

1) Traffic Control Plan and construction phasing.

2) Erosion and sedimentation control measures (permanent and temporary).

3) Water-quality treatment.

4) Mitigation areas and wetland impacts.

5) Earthwork balances and availability.

6) Potential closed drainage and underdrain outlets, and cover over drainage structures.

7) Right-of-way involvement.

8) Potential conflicts with major utilities.

9) Separate construction contracts.

This submission shall be supplemented with such conceptual drawings, illustrations and descriptive matter as are necessary to facilitate a comprehensive review of both the proposed design and the feasibility of construction, and the coordination with the design of bridges or other structures. This shall include profiles and cross-sections, particularly where clearance and setbacks may be issues.

The CONSULTANT shall indicate on the plans all traffic assignments at intersections together with the AM and PM and Saturday turning motions. The traffic assignments shall be expressed in terms of average daily traffic (ADT) for both the current and design years and directional design hourly volumes (DDHV) for the design year.

This submission shall include the CONSULTANT'S recommendations for the limits of the construction contract(s), together with preliminary estimates as appropriate and

relevant for each contract recommended. It is anticipated that this project will be constructed under multiple contracts resulting in – (possibly --) potential contracts to be determined by the CONSULTANT through coordination with the DEPARTMENT to best facilitate highway construction, wetland mitigation, and traffic management. Estimates for this submission shall be reasonably itemized to cover roadways, structures, drainage and other construction items as well as costs of railroad/trail and state-funded utility changes to be financed by the STATE.

For development of the right-of-way lines, sight-distance review and the assessment of environmental impacts, it will be necessary that all templates be plotted to develop slope lines. This shall require computation and submission of pavement superelevation calculations. Rounding of slopes shall be considered in developing slope lines, but plotted cross-section templates do not have to have rounding shown at this submission. Guardrail calculations shall also be submitted.

c. Slope and Drainage Plans - Roadway

The Slope and Drainage submission may consist of five sets of roll plans (paper prints 2.5 m to 3.0 m (8 ft. to 10 ft.) in length) showing slope lines, drainage-system details and drainage features, and proposed right-of-way lines, including drainage, slope and/or construction easements. The roll plans shall include typical sections, plan views, profiles, guardrail locations, and cross-sections with complete template plotted and appropriate references on the plans relative to drainage design to assist with the review of the drainage design and the backup drainage calculations. Complete Best Management Practices for permanent erosion and sedimentation control features and water-quality appurtenances shall be shown accompanied by backup calculations. The backup calculations shall also include a narrative, mapping and computations

addressing preconstruction and postconstruction (and postdevelopment, if applicable) drainage conditions and applicable drainage control features. Two bound drainage-computation books shall be submitted with all backup drainage calculations illustrated and referenced to each drainage appurtenance shown based on the drainage design.

At this time, a field inspection shall be held with the DEPARTMENT and indicated design changes or corrections made and incorporated into the plans for the Preliminary PS&E submission. Any indicated revisions to fit actual field conditions, including any horizontal and vertical alignment revisions found necessary during this field inspection and any resulting corrections to the right-of-way requirements, shall be made by the CONSULTANT.

Also with the Slope and Drainage submission, the CONSULTANT shall submit the Traffic Control Plans in near-final form showing temporary slopes, lane uses and widths, overhead sign structures, temporary traffic signals, temporary guardrail and barrier locations, temporary drainage, temporary easements, profiles, temporary drives, detour cross-sections and superelevations, etc. with backup calculations. Construction phasing shall be shown with narratives for each phase.

When a project is recommended to be constructed under multiple construction contracts, the Slope and Drainage submission shall include a drainage design and report addressing the drainage proposed for the overall project when construction is complete. The CONSULTANT shall also submit a Slope and Drainage plan submission for each individual contract, noting the construction phasing, traffic control and water-quality commitments. All temporary drainage features shall have backup calculations submitted with each contract submitted.

At this submission, a revised study estimate shall be prepared and submitted by the CONSULTANT based on the best information and design features shown in this submission relative to the anticipated construction including any detours or temporary widenings.

Following incorporation of the DEPARTMENT'S comments on the Slope and Drainage Submission, the CONSULTANT shall submit Wetland Impact plans showing permanent and temporary impacts for each wetland for each phased construction contract plans for inclusion with the wetland permit applications. These areas shall be hatched according to the DEPARTMENT's standards. Accompanying these plans, the CONSULTANT shall provide a tabulated impact summary showing wetland identification numbers, areas of fill or dredged volumes in the temporary and permanent conditions for each construction contract and the final build-out for this project.

d. Utility Plans

Following submission and review of the Slope and Drainage submission, the CONSULTANT shall incorporate DEPARTMENT comments into the design layout and assemble the plans into a cut sheet format. The CONSULTANT shall then furnish X sets of cut sheet plans (paper prints) of front sheet, plans, profiles, and Y sets of cross sections for use by the Design Services Section. This submission plan set is intended to facilitate the identification of the scope of work required by various utilities to comply with the planned construction. The plans are intended to reflect the near-final design of drainage systems with all appurtenances, erosion and sedimentation-control features, other structures, right-of-way lines (proposed permanent and temporary, and existing), curbing, pavement layout, traffic signals,

slope limits, guardrail, final template plotted on cross-sections, detours and detour cross-sections, traffic control issues with construction phasing, underdrain, drive locations, sidewalks, clearing and grubbing limits, fencing requirements, building demolition and lighting and signal conduit. Also, the plans shall reflect all existing detail, existing drainage and existing utilities. The intent is to have incorporated all comments from the preliminary right-of-way submission and the Slope and Drainage submission along with design work that has progressed. All final design notes may not be necessary, but the scope of construction shall be evident to the reviewing utilities. This plan set will not be reviewed and comments not given to the CONSULTANT for this submission by the DEPARTMENT. Copies of this plan set will be forwarded to the Design Services Section to finalize the utility relocations as required. The plans shall show the status of the design prior to preparation of the Preliminary PS&E submission.

e. Preliminary PS&E - Roadway

The Preliminary PS&E submission shall consist of three to five sets of plans (paper prints) of preliminary contract drawings, draft special provisions for which a current special provision is not available from the DEPARTMENT, and a Preliminary PS&E estimate of quantities and costs. The plans shall include title sheet, typical sections, all plan sheets, profile sheets, curb and pavement marking layout plans, traffic signal plans, complete traffic control plans, cross-section sheets and necessary detail sheets. Also, landscaping, seeding and grading plans shall be included, if required. Quantity Summary sheets shall be submitted. All item summary boxes for drainage, clearing and grubbing, earthwork, surfacing and select materials, curbing, guardrail, sidewalks, traffic signs, construction signs and warning devices, pavement markings, conduit and

pull boxes, landscaping and slope protection, bounds, fencing, delineation and witness markers and other items that are nearly complete shall be shown and note line-entries completed. Rounding and totals are not required. Items summary boxes of expected work not listed above shall be included and shown without line-entries completed. In developing the plans to the Preliminary PS&E stage, the DEPARTMENT will require an estimate of the quantities, expected unit costs, and total costs prepared in the form and manner prescribed by the DEPARTMENT for the Preliminary PS&E submission for each construction contract. An electronic copy of the spreadsheet shall be submitted for each estimate in a format furnished by the DEPARTMENT. Roadway items shall be kept separate from bridge items. Two bound copies of the quantity calculations shall be furnished with the estimate. The plans shall reflect all comments from the Slope and Drainage plans submission and issues that appear during final design. One bound copy of the drainage computations book (as revised based on Slope and Drainage comments) including temporary drainage computations for each contract shall be submitted with the Preliminary PS&E submission.

f. PS&E - Roadway

Upon approval in writing by the DEPARTMENT of the Preliminary PS&E submission, the CONSULTANT shall proceed to prepare and submit to the DEPARTMENT for approval the PS&E submission, which shall consist of three complete sets of paper prints of construction plans, one bound copy of the revised quantities book, and a PS&E estimate. Special Provisions shall be submitted in electronic format (Microsoft Word-compatible) for all items not in the Standard Specifications for Road and Bridge Construction of the STATE and for which a current special provision is not available.

g. Contract Plans (Mylars) and Consultant Documents

For each construction contract, upon approval of the foregoing in writing by the DEPARTMENT the CONSULTANT shall make the final submission of contract plans, any final special provisions required and a final PS&E estimate of costs. These final contract plans and documents shall reflect all comments resulting from the PS&E review. The CONSULTANT shall be prepared to incorporate all comments, furnish drafting services for omissions found and generally assist the DEPARTMENT in finalizing the contract plans. If changes are requested to be made to the CONSULTANT'S plans by the DEPARTMENT, the CONSULTANT shall be prepared to update the corresponding electronic files and submit them to the DEPARTMENT. Final acceptance of the contract plans will be made in writing. The final contract plans submitted shall include one set of mylars and one set of paper prints. Also, all CONSULTANT backup documents shall be resubmitted to reflect the final PS&E comments and final contract plan conditions. The CONSULTANT shall also submit two bound copies of the final Drainage Calculations and two bound copies of the final Quantities Books.

The final contract plans shall include:

(1) A front sheet.

(2) Typical sections of improvement.

(3) Summary-of-quantities sheets.

(4) Plan and profile sheets.

(5) Detail sheets and/or special sheets required.

(6) Cross-section sheets (shall be submitted on vellum)

Each of the plan sheets shall be labeled with its corresponding electronic file name.

3. Right-Of-Way Plans

Right-of-way plans shall consist of a separate set of plans for the purpose of negotiating, defining and recording the required right-of-way for that project. The limits of the right-of-way plans are the same as the limits of work as described in Article I-A.

Final right-of-way plans shall include:

a. Front sheet

b. Property Layout Plan Sheets 1:2500 (1"=200')-scale showing existing detail, complete parcel boundaries, proposed roadway layout, parcel numbers, property owners' names and access points granted.

c. Summary Sheets

d. Plan sheets showing all impacts (temporary or permanent)

In order to expedite right-of-way acquisitions by the DEPARTMENT, it may be necessary to complete the right-of-way plans in stages, with work in some areas being accomplished very early in the project schedule. The preparation of the right-of-way plans in stages shall coincide with the limits and scope of the corresponding phased construction contract plans. Right-of-way plans shall be in English units and metric units.

The right-of-way plans shall be developed and reviewed in three submissions. The CONSULTANT shall be prepared to provide working (progress) right-of-way plans (front sheet, summary sheets, plan sheets) (three sets of paper prints) concurrent with the Slope and Drainage plan submission for each roadway contract. Easements need not be calculated for this set. Where the proposed right-of-way lines have been firmly established, acquisition calculations shall be performed. Acquisition and easement calculations may be submitted in handwritten format. The purpose of this working

(progress) submission is to show anticipated areas of acquisition and easements, as well as correct format of right-of-way plans.

The preliminary right-of-way submission (three sets of paper prints) shall be submitted after the CONSULTANT has received and incorporates the DEPARTMENT's Slope and Drainage plan comments. The preliminary right-of-way plans shall include a front sheet, summary sheets and all plan sheets. Acquisition and easement areas shall be calculated and summary boxes filled in. Hand written format is acceptable.

Final right-of-way plans shall include all of the sheets noted above. The CONSULTANT shall be prepared to make corrections as required. Nine sets of paper prints will be required for use by the DEPARTMENT's Bureau of Right-of-Way. The CONSULTANT shall be prepared to make revisions to the final right-of-way plans based on the DEPARTMENT's negotiations with property owners. The final mylars (as described previously) shall be submitted with the mylars of the Contract Plans submission.

In the event the DEPARTMENT needs to acquire a particular parcel in advance of completing the right-of-way plan process, the CONSULTANT will be prepared to submit a working (progress) print(s) containing the parcel(s) in question. The working (progress) print(s) are intended to be construction plans showing the impacts, easements, etc., with summary boxes illustrating impacts to the parcel(s).

PROJECT:_____

Form No.
Rev. Date 12/31/98

APPENDIX 2-14

WETLAND PLANS CHECK LIST
(Refer to Sample Wetland Impact Plans in Chapter 14 of the Highway Design Manual)

SHEET	DONE BY/DATE	CHECKED BY/DATE	REMARKS
1. FRONT SHEET			
A. Location Map			
– Project location designated with a circle			
– State Project number attached to circle			
– North arrow			
– Major roads labeled			
– Town, city, county & state names labeled and boundaries shown			
– Rivers, brooks, streams, lakes, etc. labeled			
– Railroads (RR) labeled			
– Graphic Scale			
B. Layout			
– Existing buildings (solid), roadway edge of pavement (E.P.), drive E.P.'s, curbing, bridges, Railroads, rivers, streams, brooks, and lakes shown.			
– Existing rivers, streams, brooks, lakes, roads, Railroad crossing, town/city, county & state boundaries labeled, and "To (Town or City)" at all ends of the project with destination arrows. Show water course flow arrow.			
– North arrow			
– Town/city of ( )			
– County of ( )			
– Scale			
– Begin and End construction with station			
– Limit of Work with station			
– Construction alignment with stationing labeled every 100 meters			

PROJECT:_____

Form No.
Rev. Date 12/31/98

WETLAND PLANS CHECK LIST
(Refer to Sample Wetland Impact Plans in Volume 2 of the Highway Design Manual)

SHEET	DONE BY/DATE	CHECKED BY/DATE	REMARKS
– Delineated wetlands shown (if visible with scale used)			
– Designate wetland impact areas with a dash box and sheet no. noted			
C. Miscellaneous			
– Project name & (Federal & State) numbers			
– Road name in sheet title			
– "Drafted by" and "sheet checked by"			
– Sheet numbers and project numbers			
– Sheet Titled Wetland Plans			
– Note "For Construction and Alignments Details - See the Construction Plans"			
– Standard METRIC label			
2. SYMBOL SHEET			
– Latest revision date verified			
3. WETLAND PLAN SHEETS:			
NOTE: Only include the plan sheets within the wetland impact areas.			
A. General			
– Existing detail including delineated wetlands (exclude miscellaneous text such as curb types, sidewalk types, etc., and tree and utility annotation)			
– Alignment(s) labeled (construction or detour). Omit curve data, PC's, PT'S & PI'S			
– North arrow			

PROJECT:_____

Form No.
Rev. Date 12/31/98

WETLAND PLANS CHECK LIST
(Refer to Sample Wetland Impact Plans in Chapter 14 of the Highway Design Manual)

SHEET	DONE BY/DATE	CHECKED BY/DATE	REMARKS
– North arrow			
– Parcel numbers and owners' name			
– ROW lines and property lines			
• Proposed ROW: label ROW, LAROW or CAROW on all cut sheets			
• Existing ROW: label "Approximate Existing ROW" appropriately on all cut sheets			
• Property owner's name adjacent to property lines			
C. Proposed Detail:			
– TW's , EP's, curbing, sidewalks, retaining walls, and guardrail			
– Slope lines and clearing lines			
– Fence, pedestrian rail, and bike rail			
– Easements shown and labeled (do not shade or hatch)			
– Drainage			
• Closed drainage system with flow arrows and outlet pipe size			
• Culverts, labeled with flow arrows and pipe sizes			
• Stone protection locations			
• Erosion control treatment and/or water quality treatment labeled			
D. WETLAND INFORMATION			
– Wetland classification code chart (only on first Wetland Impact plan sheet)			
– Wetland impact summary - dual dimension for metric projects, (only on first Wetland Impact plan sheet)			
– Delineated wetlands with designation number and classification			
– TOB, OHW, TBZ, and TOBOHW line designations shown			
– Wetland impact location letter(s) shown			

PROJECT:_____

Form No.
Rev. Date 12/31/98

WETLAND PLANS CHECK LIST
(Refer to Sample Wetland Impact Plans in Chapter 14 of the Highway Design Manual)

SHEET	DONE BY/DATE	CHECKED BY/DATE	REMARKS
E. Notes			
– No ROW notes (alignment radius, flagging etc.)			
– No construction notes (drainage, guardrail, driveway, etc.)			
– Road names (on each cut sheet).			
– Standard METRIC Label			
– Graphic scale.			
4. ADDITIONAL REQUIREMENTS			
– Crowded wetland impact areas may require an enlarged area to be included in the plans. Verify with the BOE - Environmental Coordinator			
– Staple, stamp in red and date all outgoing Wetland plan prints with the project number and " PRELIMINARY PLANS SUBJECT TO CHANGE". Plans will be stapled and stamped on the front sheet and on each end of the roll			
– Submit Draft Wetland package to Hydraulics Section of Design Services then forward to the BOE - Environmental Coordinator and Wetland Permit Coordinator for review.			
– Include a preliminary detail in area of Slope Stabilization with the Wetland Plans			
– Wetland Plans to be placed in the "tub" separate from the ROW and Construction plans			
– File in pigeon hole all office copies of Wetland Plan submissions together in one roll with the latest revision on top when unrolled.			

WETLANDS BUREAU PERMIT APPLICATION GUIDELINES

This is a NHDOT procedural guideline for processing a typical State Programmatic General Permit (SPGP). See the Bureau of Environment for guidelines on Tidal Buffer Zone impacts and an Army Corps of Engineers (ACOE) Individual Permit (i.e. wetland impacts over 3 acres, vegetated shallows, mud flat, or saltmarsh impacts.)

The following information is guidelines, for additional information refer to the *New Hampshire Department of Transportation Permit Process Manual For NH Wetlands Bureau Permit (4).* For metric projects always show dual dimension on the Wetland Plans (See sample plans in Volume 2 of the Highway Design Manual) and the application.

BUREAU OF ENVIRONMENT (BOE):

- Provides guidance and coordinate procedures pertaining to the New Hampshire Wetlands Bureau (NHWB) administrative rules with the Bureaus of Highway Design (BOHD) and Bridge Design, Construction and Maintenance.
- Updates personnel on Administrative rule changes.
- Coordinates with NHWB and other resource agencies to obtain permits in a timely manner.
- Delineates and classifies Wetlands, Top of Bank (TOB) Ordinary High Water (OHW), Floodways, Flood plains, Tidal buffer zone, Highest Observable Tidal Line (HOTL), vegetated shallows, salt marshes and mud flats.
- Assigns wetland designation number for each wetland.
- Distributes wetlands application package/amendments/time extensions and notifies lead Bureau's of submission dates.
- Provides pictures (when available) to Project Designer of wetlands impacted by the project.
- Reviews Draft Wetland package (applications with pictures and location map, intra-Department form and plans).
- If warranted, assists Designer in preparing 30% preliminary mitigation plans included with the application package.
- Distributes two approved Permits to the Bureau of Construction and Design Services Section of the BOHD or appropriate Bureau.
- Provides and updates permit application priority list (see g:/wetlands/permits/priority.xls)

BUREAUS OF HIGHWAY AND BRIDGE (Designers):

- Prepares plan showing construction and associated wetland impacts* (see Wetland Plan Check List in Appendix 2-14).

* The plan indicates the different types of impacts. Provide the standardized legend on the plans that separates out the following impacts:
A. NHWB (non-wetland) - Typically Top of Bank (TOB) to Ordinary High Water (OHW) B. ACOE & NHWB (wetland) delineated wetlands and impacts below OHW C. Temporary (unnecessary to separate out non-wetland & wetland impacts)

- Drafts the Wetland permit application (See g:/bur16/wetlands/appl.doc)
- Provides project location map (8½" x 11" photocopy USGS map) with designated project area for application package.
- Fills out "Intra-Department Project Informational Form" (for BOE use only).- See sample explanation and form later in this appendix. See g:/bur16/wetlands/wetintra.doc for the form.
- Completes Part 404 Criteria for Shoreline Stabilization for areas with proposed shoreline stabilization with stone fill or rip-rap greater than or equal to 30 m (100 ft) along a NH Designated River, Public Waters or the Ocean (See Appendix O - *New Hampshire Department of Transportation Permit Process Manual For NH Wetlands Bureau Permit (4)*). BOE has a list of Designated Rivers & Public Waters.
- Reviews impacts with Bureau of Construction (constructability, access to site, temporary erosion control, etc.).
- Submits Draft Wetland package to Hydraulics Section of Design Services, then forward to the BOE- Environmental Coordinator for Review.
- Makes appropriate number of copies of Wetland plans, as defined in the *New Hampshire Department of Transportation Permit Process Manual For NH Wetlands Bureau Permit*. Note: Make additional office copies for the Bureaus of Highway Design and Bridge Design (if appropriate) and Hydraulics Section. Plans shall be folded into 8 1/2" X 11" and submitted to Hydraulics Section
- Finalize applications to be distributed by the BOE.

Note: Typical process time for a Wetlands Permit (submittal time to an approved permit) is the following:

A. Expedited Minimum Permit	- 1 month
B. Minimum Permit	- 2 months
C. Minor Permit	- 4 months
D. Major Permit	- 6 months
E. Individual Permit	- 6 months

BUREAU OF HIGHWAY DESIGN (Hydraulics Section):

Wetland Application

- Provides guidance and coordinate procedures pertaining to the Wetlands Bureau Administrative Rules with Bureaus of Highway Design and Environment.
- Reviews application package for completeness.
- Obtains application signatures.

- Assembles appropriate number of Wetland Applications and submits them to the BOE.

Final Wetlands Permit

- Signed by Chief of Design Services.
- Distributes final signed copy to Specifications Engineer and Designer.

WETLAND APPLICATION

Question #9 explanation (8-1-98 Wetlands Application)

a. Estimated area of permanent impacts within wetlands _____sq. ft.
"Permanent impacts" are impacts to a location where the area will not be returned to it's original state. Permanent impacts are separated in to wetland and non-wetland bank impacts.

b. Estimated area of permanent impacts within non-wetland bank ____ sq. ft.
"Non-wetland bank" means the transitional slope immediately adjacent to the edge of a brook, river or steam channel or lake, the upper limit of which is usually defined by a 4:1 break in slope. Typically this area is between the OHW and TOB.

c. Estimated area of permanent impacts within the upland portion of the Tidal Buffer Zone _____ sq. ft.
"Tidal Buffer Zone (TBZ)" means the area extending landward 100 feet from the highest observable tide line (HOTL). This area can contain wetlands, transitional areas, and natural and developed upland area. Typically this area is between the HOTL and TBZ

d. Estimated area of temporary impacts _____sq. ft.
"Temporary impacts" are impacts to wetlands and non-wetland banks where the area will be returned to it's original state upon completion of work. Temporary impacts do not separate the wetland and non-wetland bank impacts.

e. Estimated total area of all proposed work _____ sq. ft. (in N.H. Wetlands Bureau jurisdiction).
Add a+b+c+d for total.

f. Estimated length of permanent impacts to banks ___ ft.
See Figure 2-1.

g. Estimated length of permanent impacts to channel _ ft.
See Figure 2-2.

h. Estimated volume of impacts in Public Water ____cu. yd.
See BOE for list of Public Waters.

i. Final deposition of dredged material _____.
Typically answered " Outside of New Hampshire Wetlands Bureau Jurisdiction".

Questions J-N are self explanatory, if you have any questions contact your Environmental Coordinator.

FIGURE 2-1

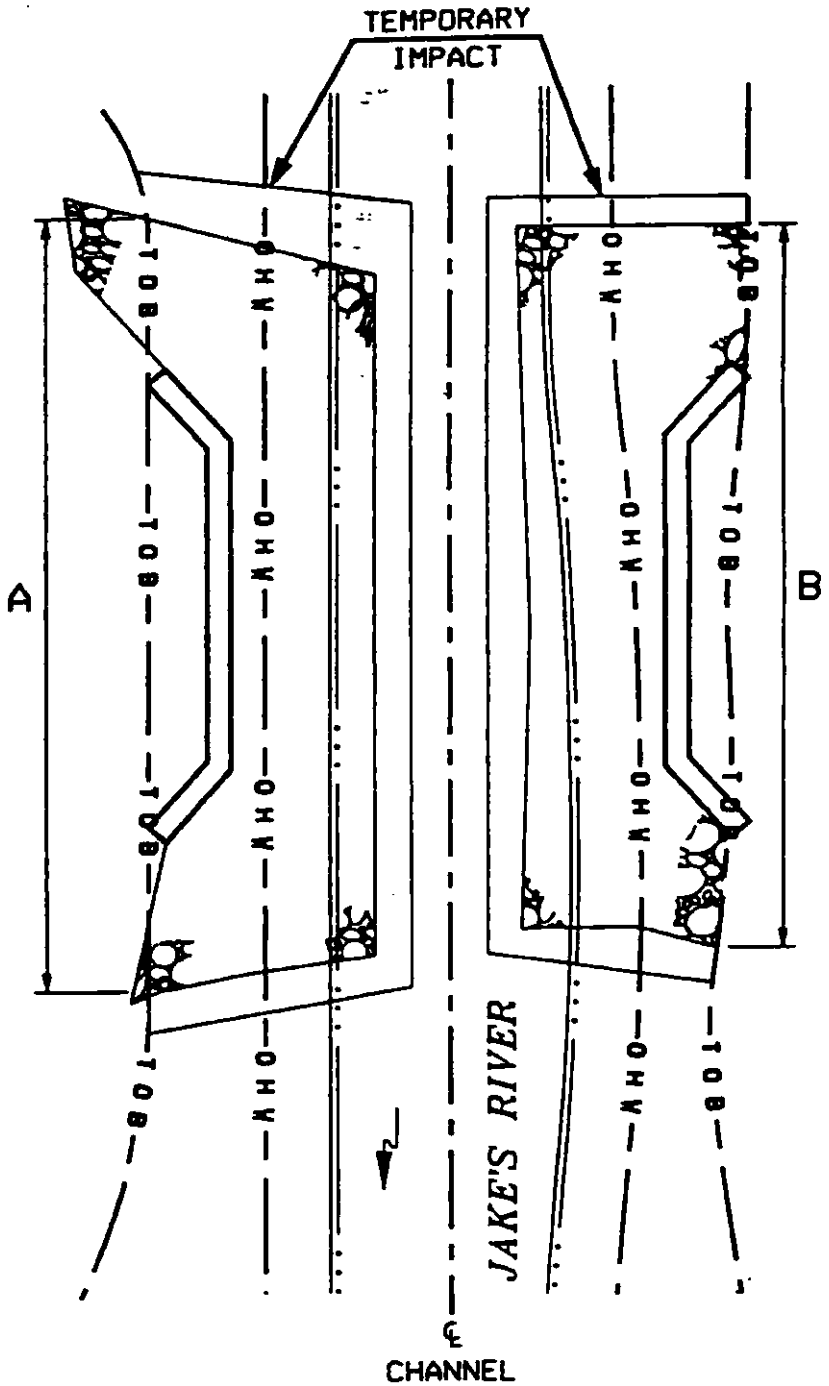

BANK IMPACTS = A + B

FIGURE 2-2

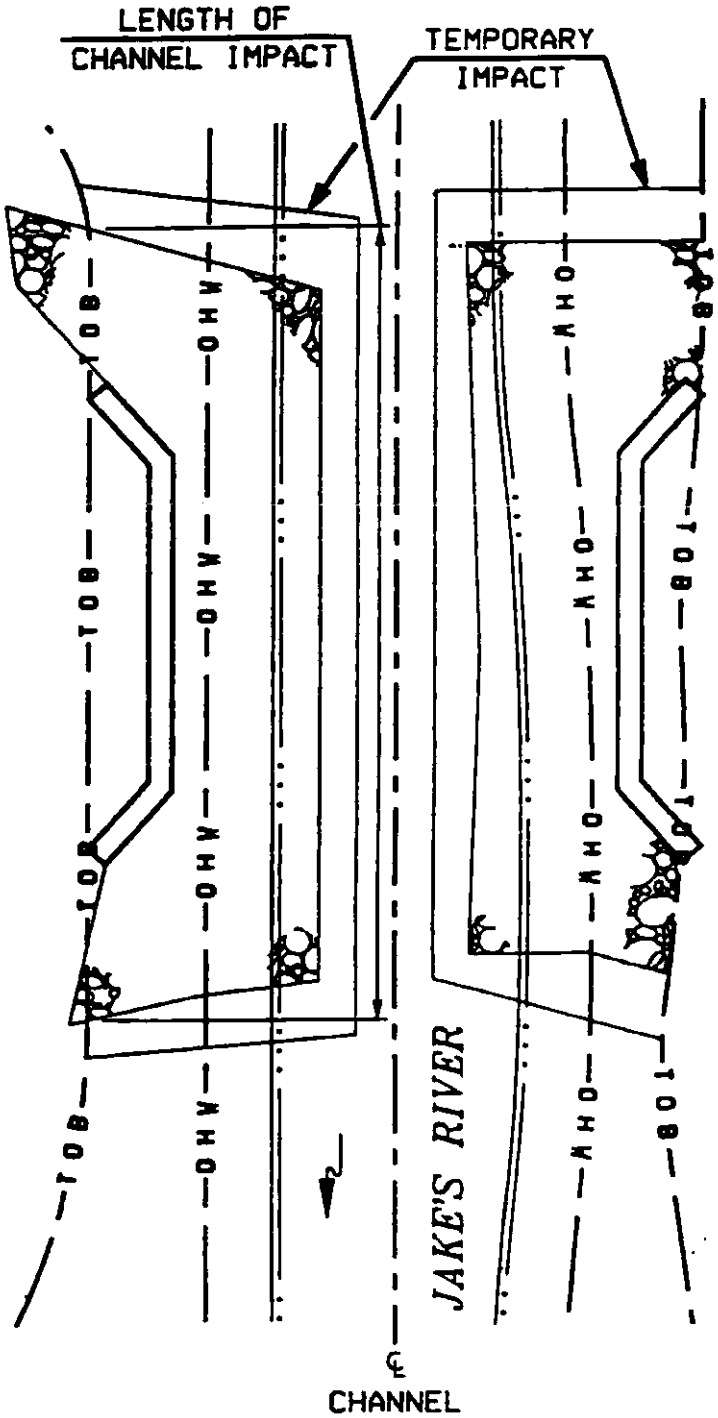
LENGTH OF
CHANNEL IMPACT
TEMPORARY
IMPACT
TOB
OHW
JAKE'S RIVER
CHANNEL

NH WETLANDS BUREAU PERMIT APPLICATION
INTRA-DEPARTMENT PROJECT INFORMATIONAL FORM

PLEASE NOTE: The bold information is an explanation for the heading.

APPLICANT'S NAME:

BUREAU/AGENCY:

CONTACT PERSON:

TELEPHONE #: E-MAIL ADDRESS:

PROJECT NAME:

STATE #:

WORK CLASS CODE: ACCOUNT CODE: *(*)*

(*) See Project Authorization Slip, Use the first four numbers in the Organization Code

BRIDGE #:

COUNTY:

PROPOSED ADVERTISING DATE: PROPOSED CONSTRUCTION DATE: **Begin construction.**

IS THIS A MAJOR OR MINOR WETLAND IMPACT PROJECT (YES/NO)?

IF YES, HAS A QUESTIONNAIRE LETTER BEEN SENT TO THE NH NATURAL HERITAGE INVENTORY?

If the Environmental Document is completed, this questionnaire has been sent.

MITIGATION:

Note how many acres of new wetlands, type of wetlands and location. Verify with the BOE.

PROJECT DESCRIPTION:

Typically found in the Engineering Report

IS THE PROJECT LOCATED ALONG OR WITHIN A NH DESIGNATED RIVER (YES/NO)?
(see NHWB Manual, Appendix R for list of designated rivers)

"Along" means within 0.4 km from a NH Designated River. Verify NH Designated River with the BOE.

WILL CONSTRUCTION OCCUR DURING LOW-FLOW PERIODS (JULY 15 - OCT. 1)?

Normally yes, unless specifically noted in the project documents or plans

WILL THIS PROJECT INVOLVE UNCONFINED IN-STREAM CONSTRUCTION WORK?

"Unconfined in-stream construction work" means no erosion control methods are to be implemented. (Not typical for Highway and Bridge Projects.)

NH WETLANDS BUREAU PERMIT APPLICATION
INTRA-DEPARTMENT PROJECT INFORMATIONAL FORM

APPLICANT'S NAME:

BUREAU/AGENCY:

CONTACT PERSON:

TELEPHONE #: **E-MAIL ADDRESS:**

PROJECT NAME:

STATE #:

WORK CLASS CODE: **ACCOUNT CODE:**

BRIDGE #:

COUNTY:

PROPOSED ADVERTISING DATE: **PROPOSED CONSTRUCTION DATE:**

IS THIS A MAJOR OR MINOR WETLAND IMPACT PROJECT (YES/NO)?

IF YES, HAS A QUESTIONNAIRE LETTER BEEN SENT TO THE NH NATURAL HERITAGE INVENTORY?

MITIGATION:

PROJECT DESCRIPTION:

IS THE PROJECT LOCATED ALONG OR WITHIN A NH DESIGNATED RIVER (YES/NO)?
(see NHWB Manual, Appendix R for list of designated rivers)

WILL CONSTRUCTION OCCUR DURING LOW-FLOW PERIODS (JULY 15 - OCT. 1)?

WILL THIS PROJECT INVOLVE UNCONFINED IN-STREAM CONSTRUCTION WORK?

STATE OF NEW HAMPSHIRE
INTER-DEPARTMENT COMMUNICATION

DATE: X

FROM: XXX, P.E. AT (OFFICE): Bureau of Highway Design
Chief of Final/Consultant Design

SUBJECT: PROJECT _____
PROJ. NO. _____
STATE NO. _____
LOCATION _____

TO: (1)_____ (5)_____ (9)_____ (13)_____
(2)_____ (6)_____ (10)_____ (14)_____
(3)_____ (7)_____ (11)_____ (15)_____
(4)_____ (8)_____ (12)_____ (16)_____

MEMORANDUM

A meeting to discuss preliminary plan coordination on this project has been scheduled for:

DATE: _____

TIME: _____

PLACE: _____

cc: Chief of Final/Consultant Design

Normal time for meeting 50%-60% of design, following right-of-way purchase plans & 50% Estimate

---

1. Proj. Manager or Bur. Admin. if no PM
2. Construction Rep.
3. Bridge Rep. (if involved)
4. Materials and Research Rep.
5. Right of Way Rep.
6. Design Services Chief
7. Utilities Rep.
8. Group Leader
9. Team Leader
10. Traffic Rep.
11. Environment Rep.
12. Other Div. Rep. (if involved) Public Works, Special Services, etc.
13. FHWA (overview projects only)
14. Bureau Admin. of Highway Maintenance
15. Municipal Highway (only if municipal funds are involved)
16. Rail and Transit

NEW HAMPSHIRE DEPARTMENT OF TRANSPORTATION

PRINT SHOP
REQUEST FOR PRINTING/ REPRODUCTION

BUREAU: OPERATIONS ☐ PUBLIC WORKS/TRANSPORTATION ☐ PROJECT DEVELOPMENT ☐ ADMINISTRATION ☐

SECTION: _____ BUREAU NUMBER: _____ REQUEST NUMBER: _____

CONTACT PERSON: _____ TELEPHONE NUMBER: _____

ESTIMATED DATE FOR COPY TO PRINT SHOP: _____

REQUEST SUBMITTED: _____ COPY SUBMITTED TO PRINT SHOP: _____

WORK/MATERIAL REQUIRED BY: _____ WORK/MATERIAL COMPLETED: _____

	QUANTY	UNIT	FULLY DETAILD DESCRIPTION (PLEASE GIVE PROJECT NAME AND STATE PROJECT NUMBER, IF APPLICABLE)
1.	*	Sets	Project Name and Number; Plans reduced to half scale for contract bidding; printed, collated, and stapled. Include the number of Const. Plans and Cross Section Sheets.
2.			
3.			
4.			
5.			
6.			
7.			

REQUISITIONER: _____

APPROVED _____
(SECTION HEAD)

FOR PRINT SHOP USE ONLY

CAMERA TIME_____ FOLDING_____ COLLATING_____
PRESS TIME_____ CUTTING_____ STAPLING_____
LABOR_____ PADDING_____ MISC._____
COMMENTS:

*Specific to each project, typically 100

STATE OF NEW HAMPSHIRE
INTER-DEPARTMENT COMMUNICATION

DATE: X

FROM: XXX, P.E.
Chief of Final/Consultant Design

AT (OFFICE): Bureau of Highway Design

SUBJECT: PROJECT _____
PROJ. NO. _____
STATE NO. _____
LOCATION _____

TO:

(1) _____	(6) _____ **	(10) _____	(14) _____
(2) _____ **	(7) _____	(11) _____	(15) _____
(3) _____	(8) _____	(12) _____	(16) _____
(4) _____	(9) _____	(13) _____	(17) _____
(5) _____			(18) _____

MEMO

A meeting to discuss pre-advertisement coordination on this project prior to advertising has been scheduled for:

DATE: _____

TIME: _____

PLACE: _____

cc: Chief of Final/Consultant Design
** Attachments (FR. Sheet, Estimate, TCP, Pros. of Work)

Normal time for meeting after Preliminary PS&E submission, about one month prior to advertising. Have other material, 16 copies - Estimate, TCP, Prosecution of Work.

---

1. Project Manager or Bureau Administrator if no PM
2. Construction Rep. **
3. Bridge Rep. (if involved)
4. Materials & Research Rep.
5. Right of Way Rep.
6. Utilities Rep. **
7. Group Leader
8. Team Leader
9. Traffic Rep.
10. Environment Rep.
11. Other Bur. Rep. if involved, Public Works Special Services, etc.
12. FHWA (overview projects only)
13. Bureau Admin. of Highway Maintenance
14. Municipal Highway (only if municipal funds are involved)
15. Specifications Engineer
16. Survey Rep.

STATE OF NEW HAMPSHIRE
INTER-DEPARTMENT COMMUNICATION

DATE: X

FROM: X
Project Manager

AT (OFFICE): Bureau of Highway Design

SUBJECT: PROJECT _____
PROJ. NO. _____
STATE NO. _____
LOCATION _____

TO:

(1) _____	(2) _____	(7) _____ *	(12) _____
_____	(3) _____	(8) _____ *	(13) _____
_____	(4) _____	(9) _____ *	(14) _____
_____	(5) _____	(10) _____	( ) _____
	(6) _____	(11) _____ *	( ) _____

MEMO

A meeting to brief the Director of Project Development on this project prior to advertising has been scheduled for:

DATE: _____

TIME: _____

PLACE: _____

cc: Project Manager
Group Leader

(Attach the Director's Data Sheet with all copies.) (Extra copies of the Director's Data Sheet filed with blue.)

Normally held week before printing, attachment is Data sheet w/map.
Display appropriate plan.
Have available Prosecution, TCP and estimate.

1. Send to :
   A) Commissioner
   B) Director of Project Development
   C) Assist. Director of Proj. Development
   D) Director of Operations
2. Chief Project Manager
3. Adm. Bureau of Highway Design*
4. Adm. Bur. of Bridge Design
5. Design Representative
6. Bridge Representative
7. Materials & Research Rep.*
8. Right of Way Representative*
9. Utility Representative*
10. Construction Representative
11. Environment Representative*
12. Other Bur. Rep. if involved
    e.g. Traffic, Municipal Highway, etc.
13. Adm. Bur. of Highway Maintenance
14. Information Office Representative.

* If involved in major issue

DISTRIBUTION OF PLANS

PROJECT _____ FEDERAL NO. _____ STATE NO. _____

DATE _____ ADVERTISING DATE _____ BIDS DUE _____

REQUESTED BY _____ EXT. NO. _____ REQUISITION NO. _____

HALF SCALE PLANS (COMPLETE SETS)

FHWA (All Overview Projects) *(To Transp. Planning 12 calendar days before Advertising)* 1
Highway Design (All Overview Projects) *(8 calendar days before Advertising)* 1
Construction *(Contact Construction for Number Required. Retained at Print Shop.)* ..... __
* Environmental Services (WSPCC) Supervisor, Water Quality Section 1

Traffic 1
Highway Maintenance 1
Municipal Hwy. *(when City/Town Funded)* 1
Materials & Research 2
Engineering Audit 1
Transportation Planning 1
District #__ Engineer 1
**Utilities Engineer 1
**Utility Companies (1 each) ..... Total: ..... __

* Consultant 1
* City or Town (1 each) ..... __
Team Leader 1
* Attorney General's Office 1
Survey Office Supervisor 2
Proposal Print File (Records Section) 1
Others ..... __

** Railroad (If Involved) 3

HALF SCALE PLANS (PARTIAL SETS)

Right-Of-Way (Front Sheet & ROW Plans) (Sheet Nos._____) 2
Bridge Design (Front Sheet & Bridge Plans) *(Contact Bridge Design for number required)* (Sheet Nos._____) ..... __
Bridge Design (Front Sheet & Reinforcing Schedule) (Sheet Nos._____) 10
Bridge Maintenance (Front Sheet & Bridge Plans) (Sheet Nos._____) 1
Traffic (Signs, Signals, & Pavement Marking Plans) (Sheet Nos._____) 2
**Chief of Design Services (Front Sheet & Plans showing RR Involvement) (Sheet Nos._____) 3
* Fish & Game (Front Sheet, Pertinent Plans & Cross Sections) (Sheet Nos._____) 1

HALF SCALE (FRONT SHEETS)

FHWA (Exempt Projects Only) *(To Transp. Planning 12 calendar days before Advertising)* 1
* Right-Of-Way *(If Roadway Classification changed)* 2
Transportation Planning 1

FULL SIZE PLANS (SETS)

Construction Plans: Construction *(Retained at Print Shop)* 4
Highway Design Pick Up
{To Chief of Design Services (Front Sheet & RR Involvement) (Sheet Nos._____) 3
{Traffic (Signs, Signals, Pavement Marking Plans) (Sheet Nos._____) 3
{Survey Office Supervisor (Front Sheet & Plans) (Sheet Nos._____) 1
{District # ____ Engineer (Omit Cross Sections) (Sheet Nos._____) 1
***{Roadside Development (Front Sht, Summary Shts, Landscape Typical & Plans) (Sheet Nos._____) .. 1

Right-Of-Way Plans: Construction *(Retained at Print Shop)* 2
Highway Design Pickup
{Survey Office Supervisor 1
{District # ____ Engineer 1
* {Attorney General's Office 1
* {City or Town (Attention City Assessor or Town Selectmen) (1 each) ..... Total: ..... __

NOTE: *1) Forward Revision After Proposal Plans to Construction w/ letter of transmittal. (REVISION AFTER PROPOSAL NO.___*
2) Final Construction and ROW Plans are mylar and retained in "tub" for future archive (omit cross sections).

* *Requires letter of transmittal*
** *Submit Prosecution of Work and Traffic Control Plan with each set of plans to utility companies. Utilities Section will write letter of transmittal and send material to the utility companies.*
*** *Include Prosecution of Work, Traffic Control Plan, and landscaping Special Provisions with each set.*