FED. ROAD DIV. NO.	STATE	PROJ. NO	FISCAL YEAR	SHEET NO.	TOTAL SHEETS
	N H	I-93-1 (68)1		19	79

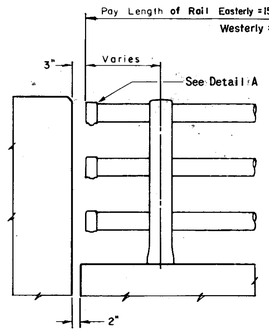

END ELEVATION

Scale: 3/4" = 1'-0"

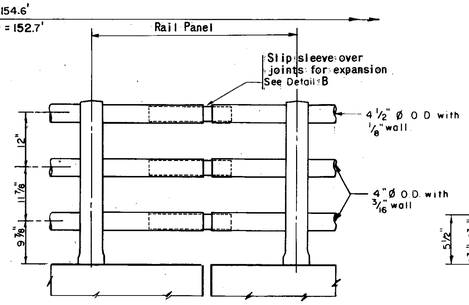

ELEVATION AT EXPANSION JOINT

Scale: 3/4" = 1'-0"

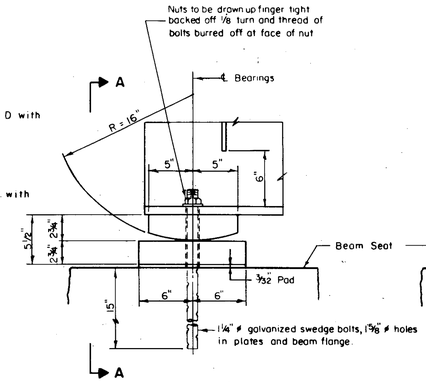

ELEVATION

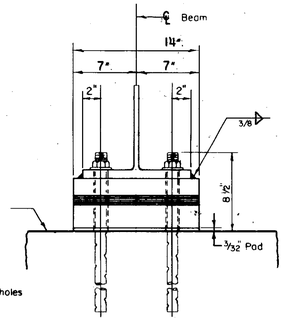

SECTION A-A

FIXED BEARING

Scale: 1 1/2" = 1'-0"

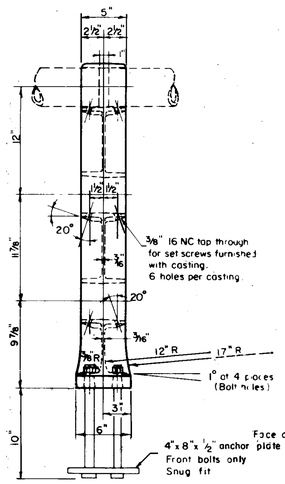

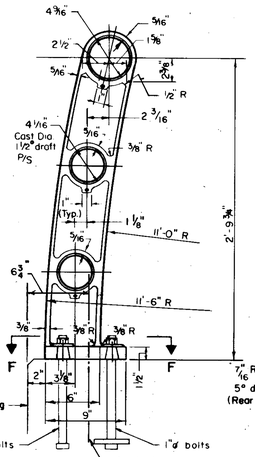

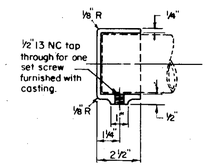

DETAIL A

Scale: 3" = 1'-0"

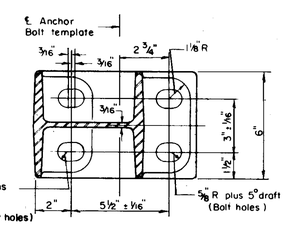

SECTION F-F

Scale: 3" = 1'-0"

ALUMINUM BRIDGE RAILING DETAILS

Scale: 1 1/2" = 1'-0" (except as noted)

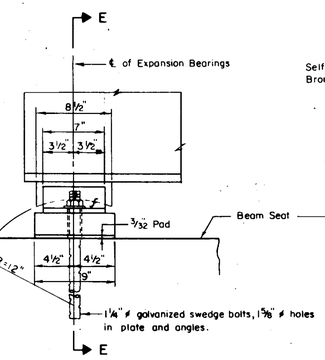

ELEVATION

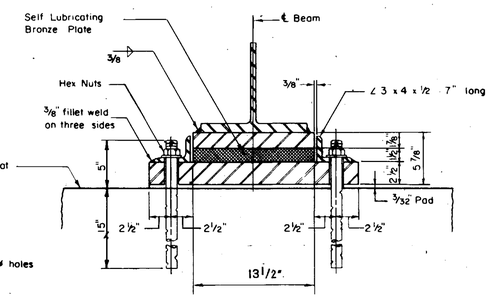

SECTION E-E

EXPANSION BEARING

Scale: 1 1/2" = 1'-0"

Bridge Shoe Notes:

1. All expansion and fixed bearing assemblies including anchor bolts will be paid for as Bridge Shoes Item 352.1
2. Structural Steel for Bridge Shoes shall conform to A.S.T.M. Designation A36.

Bridge Railing Notes:

1. Railing Posts to be placed normal to grade
2. For anchor bolts use 1" ø and 5/8" ø galvanized steel
3. Grind smooth all sharp edges.
4. Caulk under base plates with lead wool.
5. Not more than one rail to be joined at the same post.
6. Cost of all bolts, hex nuts, washers, and anchor ℄'s to be subsidiary.

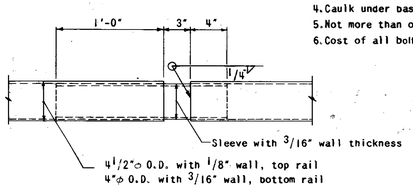

DETAIL B

Scale: 1 1/2" = 1'-0"

△	DESCRIPTION	BY	DATE

REVISIONS

STATE OF NEW HAMPSHIRE
DEPARTMENT OF PUBLIC WORKS AND HIGHWAYS

TOWN SALEM — BRIDGE NO. 081/055

FEDERAL PROJECT I-93-1(68)1 — STATE PROJECT P-7252

RAMP B OVER INTERSTATE ROUTE 93 SOUTHBOUND

BRIDGE SHOES AND RAILING DETAILS

	BY	DATE		BY	DATE	BRIDGE SHEET NO.
DESIGNED	S.G.G.	6-64	CHECKED	S.P.	6-64	10 OF 11
DRAWN	R.A.K.	6-64	CHECKED	K.S.	6-64	FILE NUMBER
TRACED	S.G.G.	6-64	CHECKED	K.S.	6-64	19-3-2
QUANTITIES	S.P.	6-64	CHECKED	S.H.G.	6-64	

THE CLARKESON ENGINEERING CO., INC.
CONSULTING ENGINEERS
WELLESLEY MASSACHUSETTS

PROJ. NO.	SHEET NO.	TOTAL SHEETS
I-93-1(68)1	19	86