FED. ROAD DIV. NO.	STATE	PROJ. NO.	FISCAL YEAR	SHEET NO.	TOTAL SHEETS
1	N.H.	193-1(26)2	—	21	19

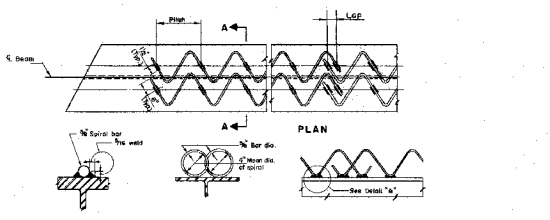

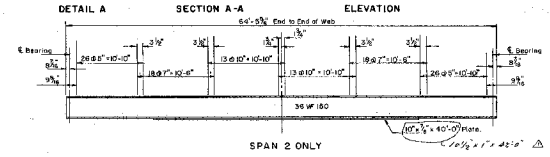

SPAN 2 ONLY

TYPICAL SPIRAL SHEAR CONNECTORS
(DETAILS & LAYOUT)
No Scale

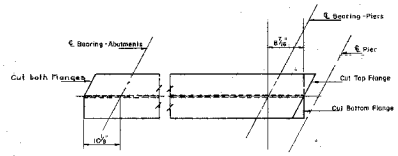

BEAM CUT-OFF DETAIL
No Scale

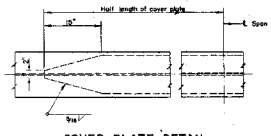

COVER PLATE DETAIL
No Scale

DIMENSION "A"		
	East Side	West Side
Pier 1	9 3/16"	5 3/16"
Pier 2	10 3/16"	4 3/16"

Dimensions measured along ℄ Piers

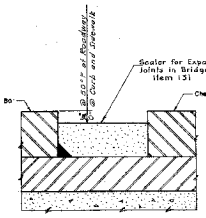

DETAIL C

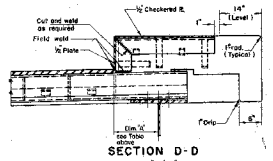

SECTION D-D
Scale: 1" = 1'-0"

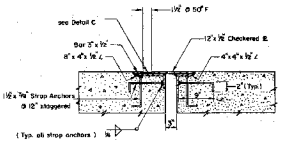

SECTION E-E
Scale: 1" = 1'-0"

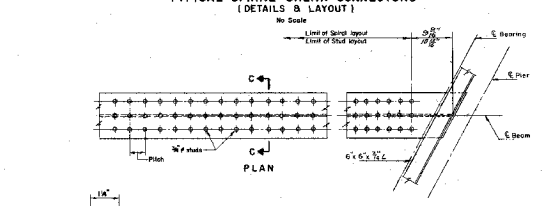

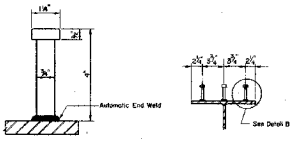

DETAIL B **SECTION C-C**

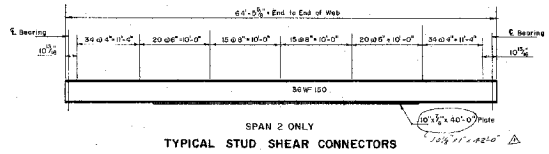

SPAN 2 ONLY

TYPICAL STUD SHEAR CONNECTORS
(DETAILS & LAYOUT)
No Scale

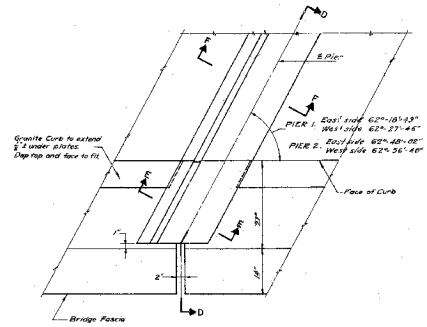

PLAN OF EXPANSION DAM OVER PIERS
Scale 1"=1'-0"

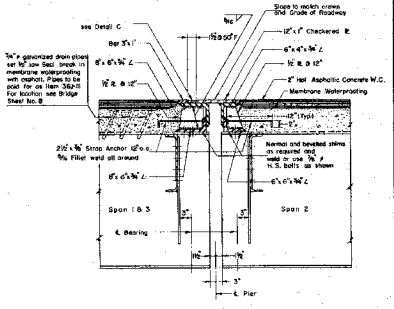

SECTION F-F
Scale: 1" = 1'-0"

NOTES:
1. The Contractor may supply either a stud or spiral shear device.
2. Spirals are to be plain bars.
3. Studs may be shop or field welded to beams.
4. Spirals must be shop welded.
5. All Expansion joint angles are continuous between exterior stringers.
6. All welds are ⅜" continuous fillets unless otherwise specified.
7. Pour concrete to thoroughly fill underneath the steel plates.
8. Provide temporary connection between checkered plate and seat angle for shipping and erection purposes only.
9. Where steel rubs on steel at Expansion Joints, rub powdered graphite into sliding surfaces. Do not paint.
10. Shear Connectors to be paid for as item 559A.
11. Seal joints between steel and granite with an approved caulking compound. Cost to be subsidiary.

1	For A Shown Revised	HCAC	7/29/71
Δ	DESCRIPTION	BY	DATE

REVISIONS

THE CLARKESON ENGINEERING CO., INC.
CONSULTING ENGINEERS
BOSTON MASSACHUSETTS

STATE OF NEW HAMPSHIRE
DEPARTMENT OF PUBLIC WORKS AND HIGHWAYS

TOWN SALEM — BRIDGE NO. 073/063
FEDERAL PROJECT 193-1(26)2 — STATE PROJECT P-3688-C

INTERSTATE 93 SOUTHBOUND OVER ROUTE 38

SHEAR CONNECTORS AND EXPANSION DAMS

	BY	DATE		BY	DATE	BRIDGE SHEET NO.
SUBMITTED	F.T.	11/59	CHECKED	J.B.	11/59	10 of 11
DRAWN	S.B.L.	11/59	CHECKED	F.T.	11/59	FILE NUMBER
TRACED	S.B.L.	11/59	CHECKED	F.T.	11/59	13-2-5
QUANTITIES	F.T.	11/59	CHECKED	J.B.	11/59	

FEDL. RD.	SHEET NO.	TOTAL SHEETS
193-1(26)2	21	19