| FED. ROAD DIV. NO. | STATE | PROJ. NO. | FISCAL YEAR | SHEET NO. | TOTAL SHEETS |
|---|---|---|---|---|---|
| | N. H. | I93-1 (39)3 | | 17 | 165 |

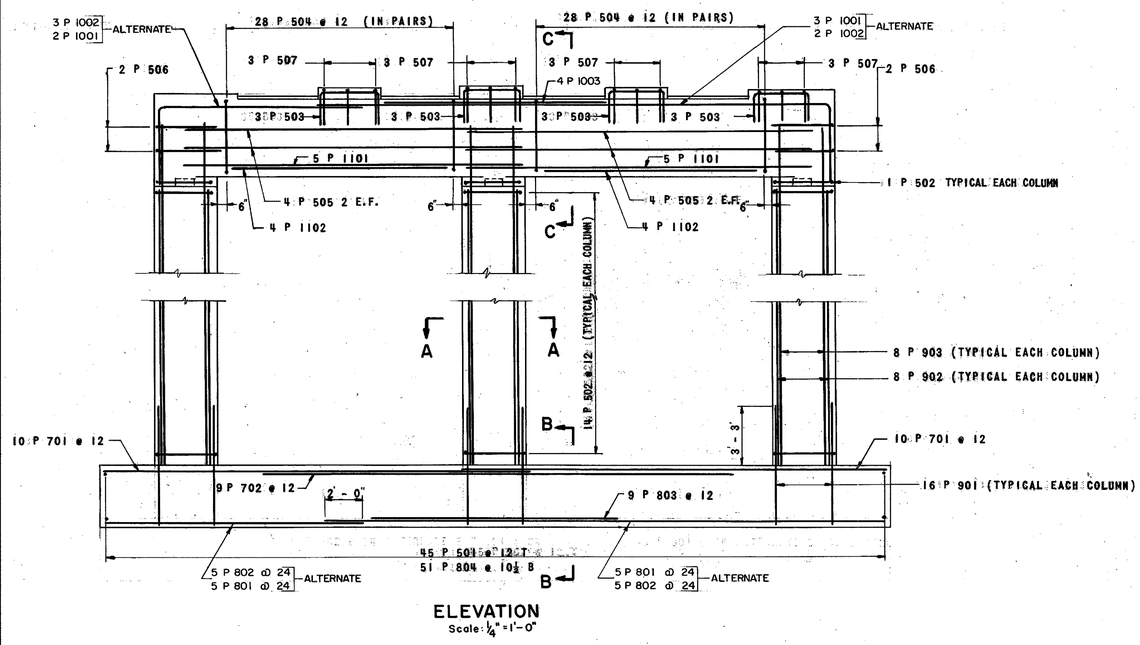


ELEVATION
Scale: ¼" = 1'-0"

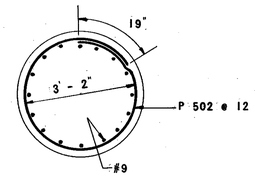


SECTION A-A
Scale: ½" = 1'-0"

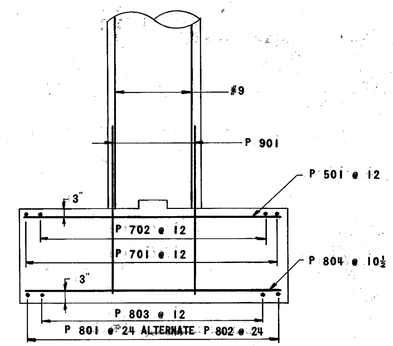


SECTION B-B
Scale: ⅜" = 1'-0"

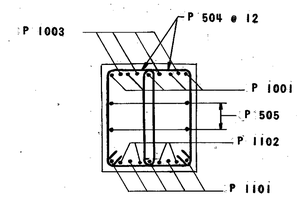


SECTION C-C
Scale: ⅜" = 1'-0"

NOTES: 1. Care should be taken to place reinforcing so as to clear anchor bolts.
2. All bars to have 2" cover except as noted.

| △ | DESCRIPTION | BY | DATE |
|---|---|---|---|
| | REVISIONS | | |

STATE OF NEW HAMPSHIRE
DEPARTMENT OF PUBLIC WORKS AND HIGHWAYS

TOWN SALEM — BRIDGE NO. 058/089
FEDERAL PROJECT I93-1(39)3 — STATE PROJECT P-4201-A

INTERSTATE 93 UNDER BROOKDALE ROAD

PIER REINFORCEMENT

| | BY | DATE | | BY | DATE | BRIDGE SHEET NO. |
|---|---|---|---|---|---|---|
| DESIGNED | J. I. M. | 6/60 | CHECKED | B.J.K. | 9/60 | 8 OF 14 |
| DRAWN | E. R. | 6/60 | CHECKED | W. M. | 9/60 | FILE NUMBER |
| TRACED | E. R. | 6/60 | CHECKED | W. M. | 9/60 | 14-3-1 |
| QUANTITIES | E. R. | 9/60 | CHECKED | W. M. | 9/60 | |

THE CLARKESON ENGINEERING CO., INC.
CONSULTING ENGINEERS
BOSTON MASSACHUSETTS

| PROJ. NO. | SHEET NO. | TOTAL SHEETS |
|---|---|---|
| I 93-1(39)3 | 17 | 165 |

K+E 184 IMPERIAL TRACING CLOTH T.H. D. L. H. INC. 63864