| FED. ROAD DIV. NO. | STATE | PROJ. NO. | FISCAL YEAR | SHEET NO. | TOTAL SHEETS |
|---|---|---|---|---|---|
| 1 | N.H. | 93-1(26)12 | | 24 | 79 |

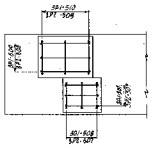

SECTION C-C
Scale: 1/2"=1'-0"

Note: No reinforcing needed in pad under beam No. 12 Pier No. 1 & 2.

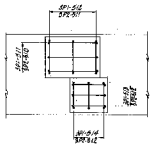

SECTION D-D
Scale: 1/2"=1'-0"

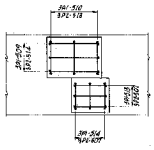

SECTION E-E
Scale: 1/2"=1'-0"

Note: No reinforcing needed in pad under beam No. 11 Pier No. 1 & 2.

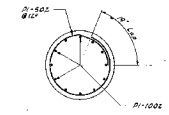

SECTION B-B
Scale: 1/2"=1'-0"

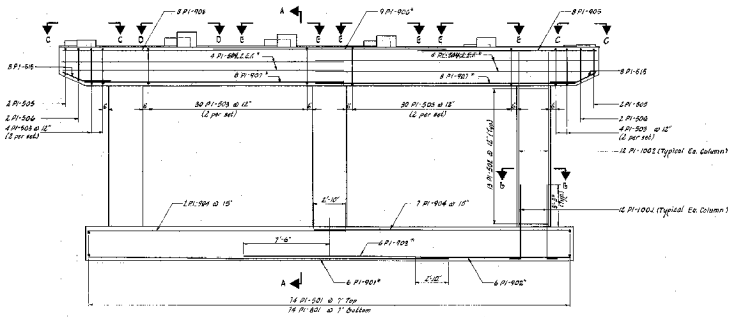

ELEVATION PIER 1 REINFORCEMENT
PIER 2 SIMILAR
Scale: 1/4"=1'-0"

Notes: 1. All bars to have 2" cover except as noted.
2. Bars to be placed to clear anchor bolts.
3. * Dimensions missing as shown in Section A-A

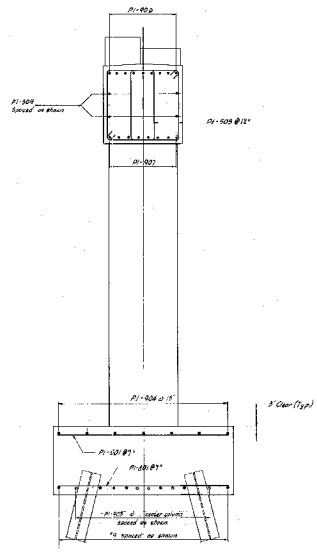

SECTION A-A
Scale: 1/2"=1'-0"

| △ | DESCRIPTION | BY | DATE |
|---|---|---|---|
| | REVISIONS | | |

STATE OF NEW HAMPSHIRE
DEPARTMENT OF PUBLIC WORKS AND HIGHWAYS

TOWN SALEM — BRIDGE NO. 073/063
FEDERAL PROJECT I 93-1(26)12 — STATE PROJECT P-3688-C

INTERSTATE 93 SOUTHBOUND OVER ROUTE 38

PIER REINFORCEMENT

| | BY | DATE | | BY | DATE | BRIDGE SHEET NO. |
|---|---|---|---|---|---|---|
| DESIGNED | W.M. | 12/59 | CHECKED | M.P. | 12/59 | 7 OF 11 |
| DRAWN | D.W.D. | 12/59 | CHECKED | W.M. | 12/59 | FILE NUMBER |
| TRACED | D.W.D. | 12/59 | CHECKED | M.P. | 12/59 | 13-2-5 |
| QUANTITIES | W.M. | 12/59 | CHECKED | M.P. | 12/59 | |

THE CLARKESON ENGINEERING CO., INC.
CONSULTING ENGINEERS
BOSTON MASSACHUSETTS

| PROJ. NO. | SHEET NO. | TOTAL SHEETS |
|---|---|---|
| 93-1(26)12 | 24 | 79 |