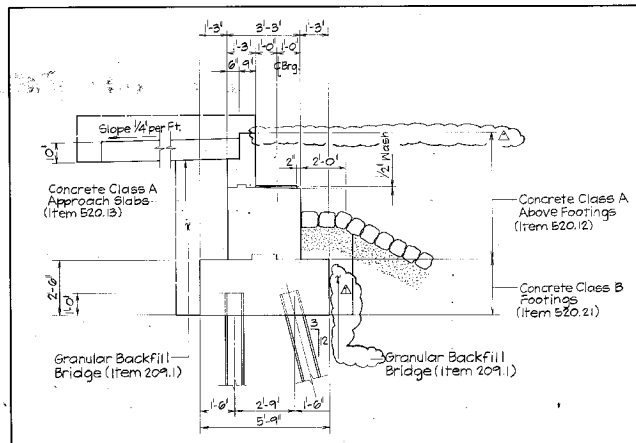

TYPICAL ABUTMENT SECTION
1/2"=1'-0"

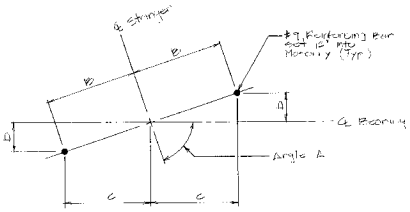

ANCHOR BOLT LAYOUT
N.T.S.

LOCATION	STRINGER	ANGLE A	B(IN.)	C(IN.)	D(IN.)
Abutment A	1A	73° 34'13"	7 13/16	7 1/2	2 3/16
	1B	73° 34'13"	7 13/16	7 1/2	2 3/16
Abutment #	13A	69° 23'02"	7 13/16	7 5/16	2 1/4
	13B	69° 23'02"	7 13/16	7 5/16	2 1/4
Pier No. 1	1A	73° 34'13"	8 3/16	7 7/8	2 5/16
	1B	73° 34'13"	8 3/16	7 7/8	2 5/16
	7A	71° 17'47"	9	8 1/2	2 7/8
	7B	71° 17'47"	9	8 1/2	2 7/8
Pier No. 2	7A	71° 17'47"	11 3/8	10 3/4	3 5/8
	7B	71° 17'47"	11 3/8	10 3/4	3 5/8
	13A	69°23'02"	8 3/16	7 11/16	2 7/8
	13B	69° 23'02"	8 3/16	7 11/16	2 7/8

ABUTMENT & PIER NOTES

1. Bearing pedestals shall be finished 1/4"±, 1/8" lower than plan elevation shown and then ground level. Elevations shall be taken at each pedestal and shims shall be ordered equal to difference in the plan elevations and the actual elevations. Shim plates to be included under Item 550.1. At the contractor's option, bearing pedestals may be poured slightly high and the entire bearing pedestal surface machine dressed to the exact elevation.
2. Pier pedestals and seats shall be blast-cleaned and coated with epoxy coating for concrete (Item 536.11). Do not coat existing epoxy coated surfaces which remain intact after blast-cleaning unless otherwise directed by the Engineer.
3. Temporary sheet pile retaining structures are anticipated for the widening of abutments and piers. Sheet pile systems shall be designed by a Licensed Professional Engineer. The retaining structure shall prevent undermining of the roadway and existing substructure. The Contractor shall submit a proposed traffic control scheme to the Engineer for approval prior to the start of substructure construction. Temporary retaining structures shall be included under Item 503, Coffordams. Existing roadway and pavement impacted by the proposed Pier and abutment construction shall be repaired as directed by the Engineer (Item 503). Coffordams.
4. All exposed edges of concrete shall be chamfered 3/4" unless otherwise shown.
5. Excavation and backfilling for removal and reconstruction within the limits of the existing piers, abutments and wingwalls shall be included in Item 504.1. Existing stone slope paving disturbed or removed during construction shall be reset (with a gravel blanket) as directed by the Engineer (Item 583.1).
6. Prior to placing new concrete, the removal surfaces of the existing concrete shall be blast-cleaned and coated with an NHDOT approved bonding agent (Item 520.12).
7. Place a 3'-0" wide strip of barrier membrane, Item 538.2, over the backside of all abutment construction joints shown on the plans.
8. Holes drilled into existing concrete shall be drilled 1/2" larger than the bar diameter and grouted with high strength, non-shrink mortar. If existing reinforcing bars are encountered during drilling, new holes shall be drilled to achieve the required embedment. Drilling and grouting shall be included under Item 520.12.
9. Place reinforcing bars in abutment bridge seats to clear drilling for anchor bolts.
10. Sawcut shall be made along all exposed removal lines where new concrete shall be placed against existing concrete (Item 502). Care shall be taken not to damage the existing reinforcing steel when sawcutting. If bars are damaged, new bars shall be drilled and grouted as directed by the Engineer at the Contractor's expense.
11. The anchor bolts in pier bridge seats and pedestals shall be set before the concrete is poured and shall be accurately held by a template. No drilling will be permitted.
12. Reinforcement cover shall be 3" for footings and 2" elsewhere unless otherwise shown.
13. For Grading, see Bridge Sheet No. 2 of 19.
14. Piers shall be backfilled with excavated granular material compacted to 95% maximum dry density.
15. Care shall be taken to retain those existing steel bars required for splices in the new abutments. Concrete shall be removed so as not to damage the bars or the remaining concrete. Bars or concrete damaged shall be repaired or replaced at the Contractor's expense. Bars shall be cut as shown and cleaned of all foreign material. All costs to be included in Item 502.

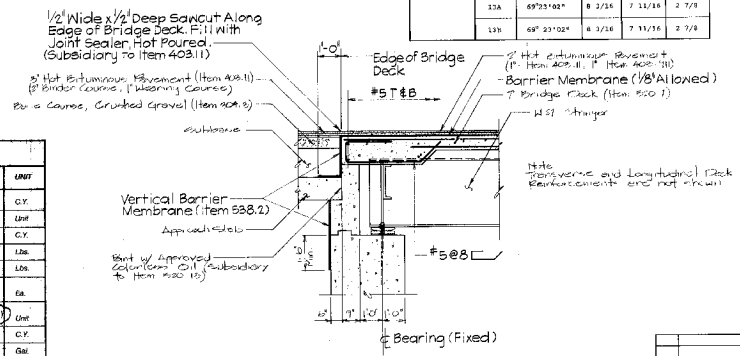

DECK END DETAIL
1/2"=1'-0"

ESTIMATE OF ABUTMENT QUANTITIES				
ITEM NO.	DESCRIPTION	ABUT. A	ABUT. B	UNIT
209.1	Granular Backfill Bridge			C.Y.
503	Coffordams	1/4	1/4	Unit
504.1	Common Bridge Excavation			C.Y.
510.01	Furnishing Steel Bearing Piles			Lbs.
510.02	Driving Steel Bearing Piles			Lbs.
510.65	Driving Points for Steel Bearing Piles			Ea.
520.12	Conc. Class A, Above Footings	(CY)	(CY)	Unit
520.21	Concrete Class B (Footings)			C.Y.
534.3	Water Repellent (Silane-Siloxane)			Gal.
538.2	Barrier Membrane (Vertical Surfaces)			S.Y.
544	Reinforcing Steel			Lbs.
544.2	Reinforcing Steel (Epoxy Coated)			Lbs.
902.1	Rip Rap A			C.Y.

PIER QUANTITIES				
ITEM NO.	DESCRIPTION	PIER 1	PIER 2	UNIT
503	Coffordams	1/4	1/4	Unit
504.1	Common Bridge Excavation			C.Y.
510.01	Furnishing Steel Bearing Piles			Lbs.
510.02	Driving Steel Bearing Piles			Lbs.
510.65	Driving Points for Steel Bearing Piles			Each
520.12	Conc. Class A, Above Footings	(CY)	(CY)	Unit
520.21	Conc. Class B, Footings			C.Y.
534.3	Water Repellent (Silane-Siloxane)			Gal.
536.11	Epoxy Coating for Concrete			S.F.
544	Reinforcing Steel			Lbs.
544.2	Reinforcing Steel (Epoxy Coated)			Lbs.

REVISIONS			
1	BULLETIN NO. 1	SEM	5/2/00
△	DESCRIPTION	BY	DATE

AUG 28 1990

STATE OF NEW HAMPSHIRE
DEPARTMENT OF TRANSPORTATION
BRIDGE DESIGN

TOWN SALEM BRIDGE NO. 084/061
FEDERAL PROJECT STATE PROJECT
LOCATION RAMP A WIDENING OVER POLICY ROAD

Kimball Chase
Engineering • Surveying • Land Planning and Design
One Cate Street, Portsmouth, NH 03801 • (603)431-2520
Salem, NH • Concord, NH • Bath, ME

ABUTMENT AND PIER DETAILS

	BY	DATE		BY	DATE	BRIDGE SHEET NO.
DESIGNED	SEM	4-90	CHECKED	MTB	7-90	7 of 19
DRAWN	JDL / RH	4-90	CHECKED	MTB	7-90	FILE NUMBER
TRACED			CHECKED			39-4-2
QUANTITIES			CHECKED			

REVIEWED BY PROJECT NO. SHEET NO. TOTAL SHEETS