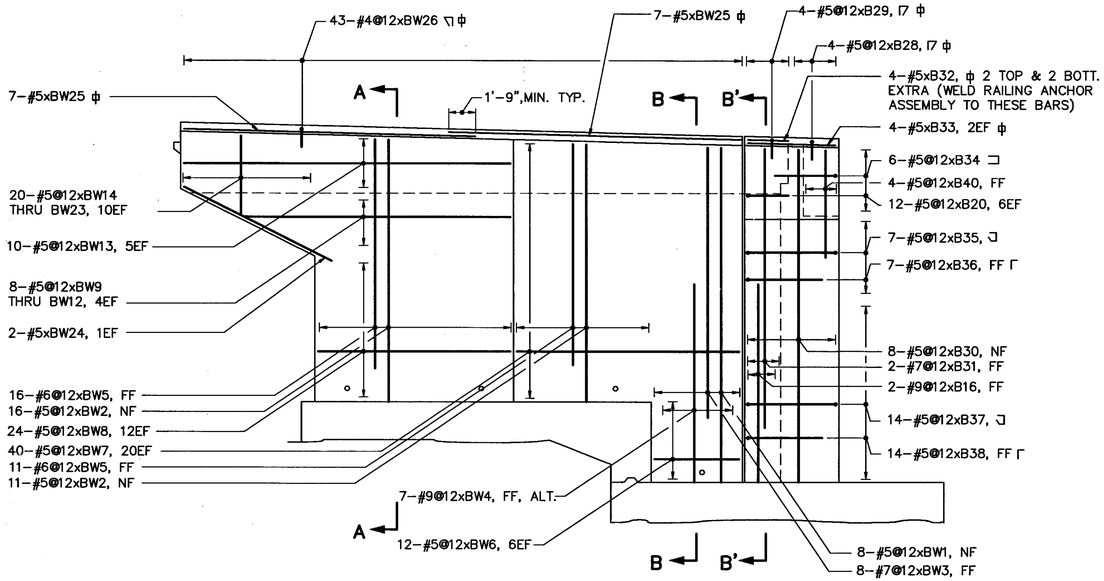

WEST WING REINFORCEMENT

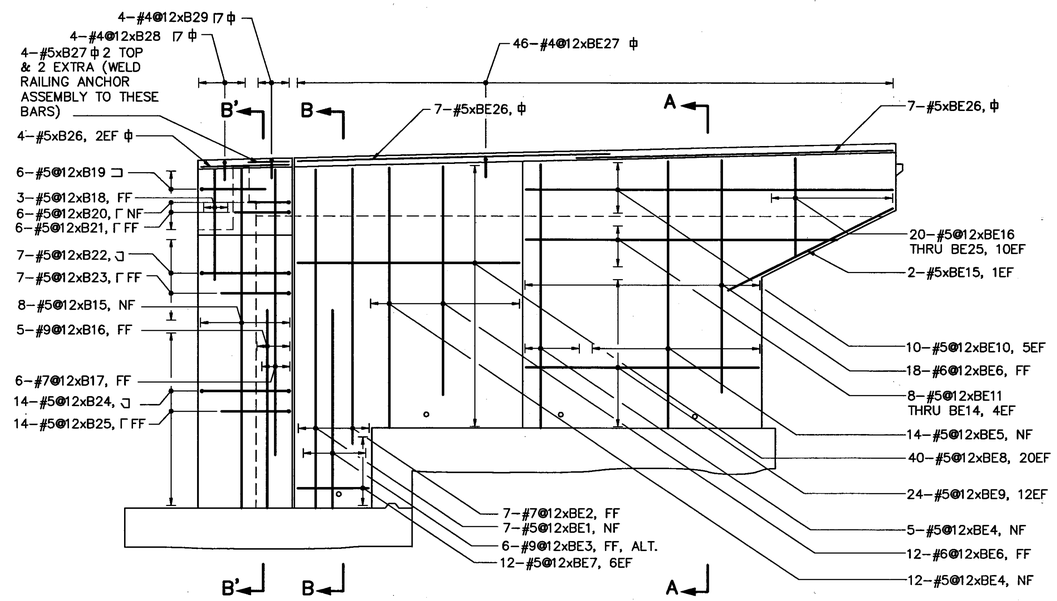

EAST WING REINFORCEMENT

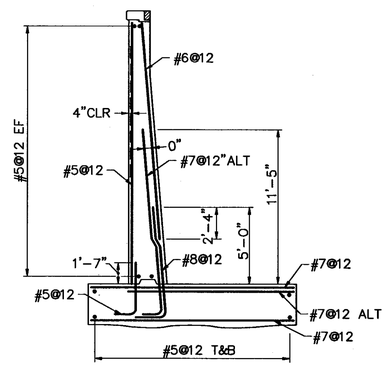

SECTION A–A REINFORCEMENT

(SECTION A'–A' SIMILAR)

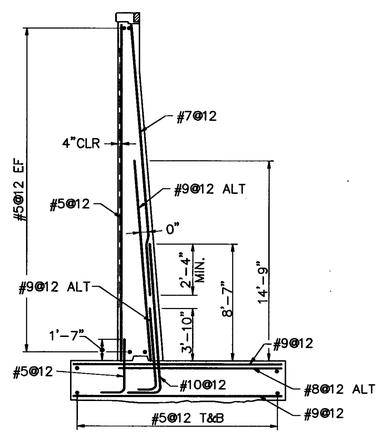

SECTION B–B REINFORCEMENT

(SECTION B'–B' SIMILAR)

NOTES:

1. REINFORCING STEEL TO BE 2½" CLEAR FROM CONCRETE SURFACES EXCEPT AS NOTED.
2. FOR TYPICAL REINFORCEMENT DETAIL AT CURB SEE BR. SH. NO. 10 OF 21.

ϕ EPOXY COATED

SHEET SCALE : 3/16"=1'–0"

△	DESCRIPTION	BY	DATE
	REVISIONS		

STATE OF NEW HAMPSHIRE
DEPARTMENT OF TRANSPORTATION
BUREAU OF BRIDGE DESIGN

TOWN WINDHAM — BRIDGE NO. 139/094
FEDERAL PROJECT IM-T-93-1 (187)5 — STATE PROJECT 11628
LOCATION INTERSTATE–93 NORTHBOUND OVER NH 111–A

ABUTMENT B WINGS REINFORCEMENT

	BY	DATE		BY	DATE
DESIGNED	L.M. BARTLEY	4/93	CHECKED	S.M. GUNN	4/93
DRAWN	D.O. MODRICKER	4/93	CHECKED	T.L. GRANT	4/93
TRACED	———		CHECKED	———	
QUANTITIES			CHECKED		

BRIDGE SHEET NO. 12 OF 21
FILE NUMBER 58–1–1

FAY, SPOFFORD & THORNDIKE, INC
BOSTON, MA – LEXINGTON, MA – BEDFORD, NH

REVIEWED BY

FEDERAL PROJ. NO	SHEET NO.	TOTAL SHEET
IM-T-93-1 (187)5	33	83

VMA17BWR (1=64)