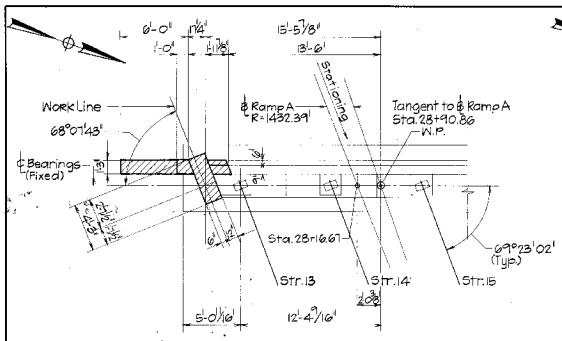

PARTIAL PLAN ABUTMENT B - DEMOLITION
1/4"=1'-0"

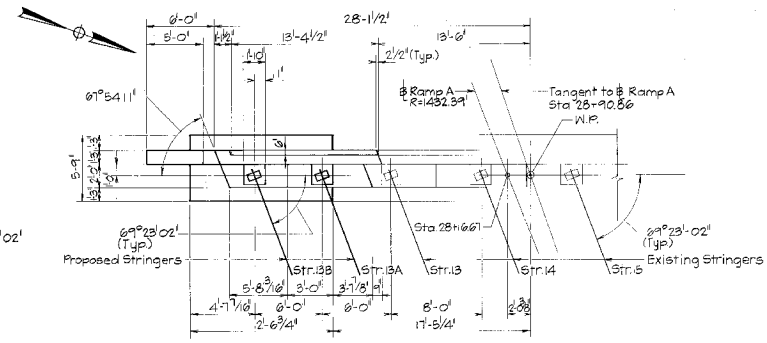

PARTIAL PLAN ABUTMENT B - PROPOSED
1/4"=1'-0"

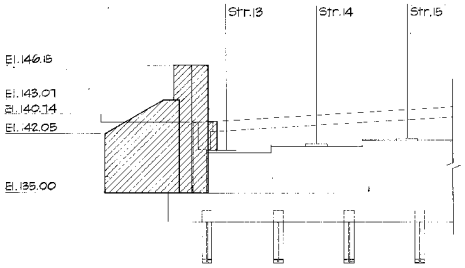

ELEVATION - DEMOLITION
1/4"=1'-0"

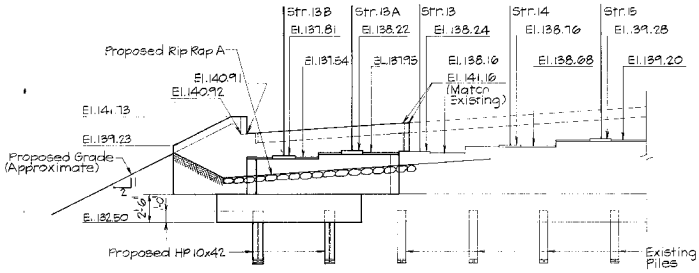

ELEVATION - PROPOSED
1/4"=1'-0"

Abutment Pile Notes:

1. All piles in abutments and piers shall be HP 10 x 42.
2. Design load = 40 tons per pile.
3. Piles shall be driven to bedrock.
4. Estimated pile length is 50 feet.
5. Pile splices will not be allowed.
6. I indicates vertical pile
7. I indicates battered pile at 3:12 slope in the direction of the arrow.

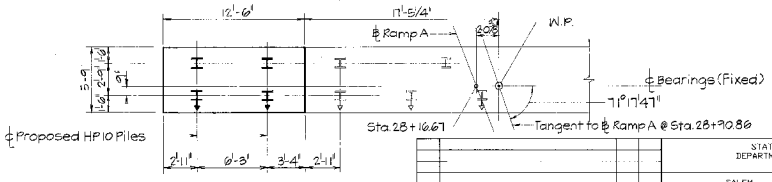

PARTIAL PILE PLAN - PROPOSED
1/4"=1'-0"

AUG 28 1990

DESCRIPTION	BY	DATE
REVISIONS		

Kimball Chase
Engineering • Surveying • Land Planning and Design
One Cate Street, Portsmouth, NH 03801 • (603)431-2520
Salem, NH • Concord, NH • Bath, ME

STATE OF NEW HAMPSHIRE
DEPARTMENT OF TRANSPORTATION
BRIDGE DESIGN

TOWN: SALEM — BRIDGE NO. 084/061
FEDERAL PROJECT: ——— — STATE PROJECT: ———
LOCATION: RAMP A WIDENING OVER POLICY ROAD

ABUTMENT B MASONRY

	BY	DATE		BY	DATE	BRIDGE SHEET NO.
DESIGNED	JJF / RCB	5-90	CHECKED	SRM	7-90	6 of 19
DRAWN	RH	4-90	CHECKED	MTB	7-90	FILE NUMBER
TRACED			CHECKED			39-4-2
QUANTITIES			CHECKED			

REVIEWED BY ——— PROJECT NO. ——— SHEET NO. ——— TOTAL SHEETS ———