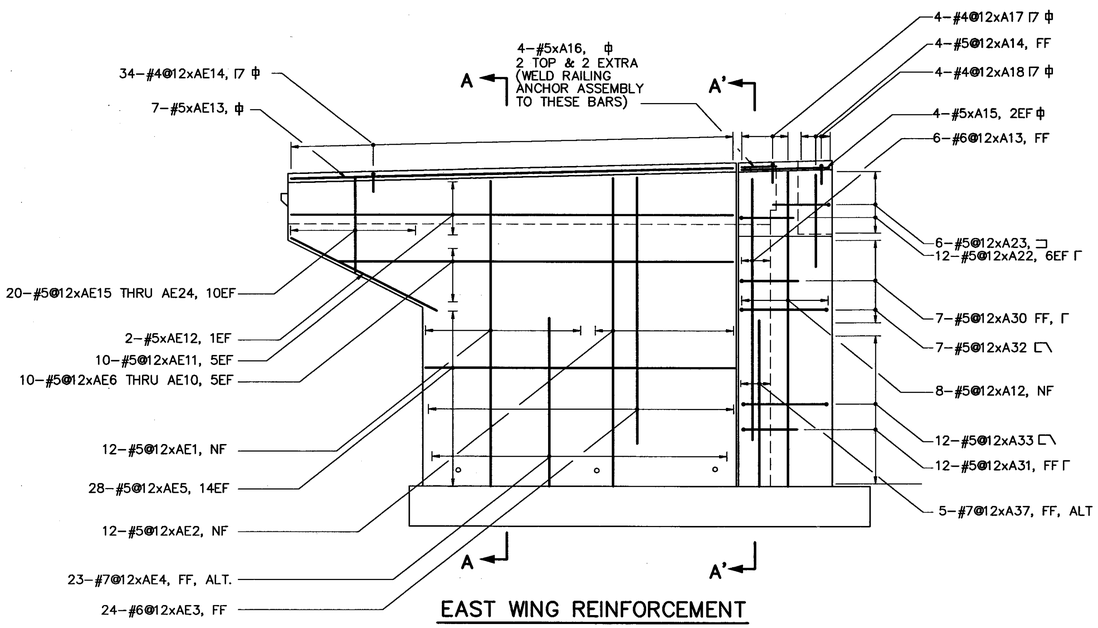

EAST WING REINFORCEMENT

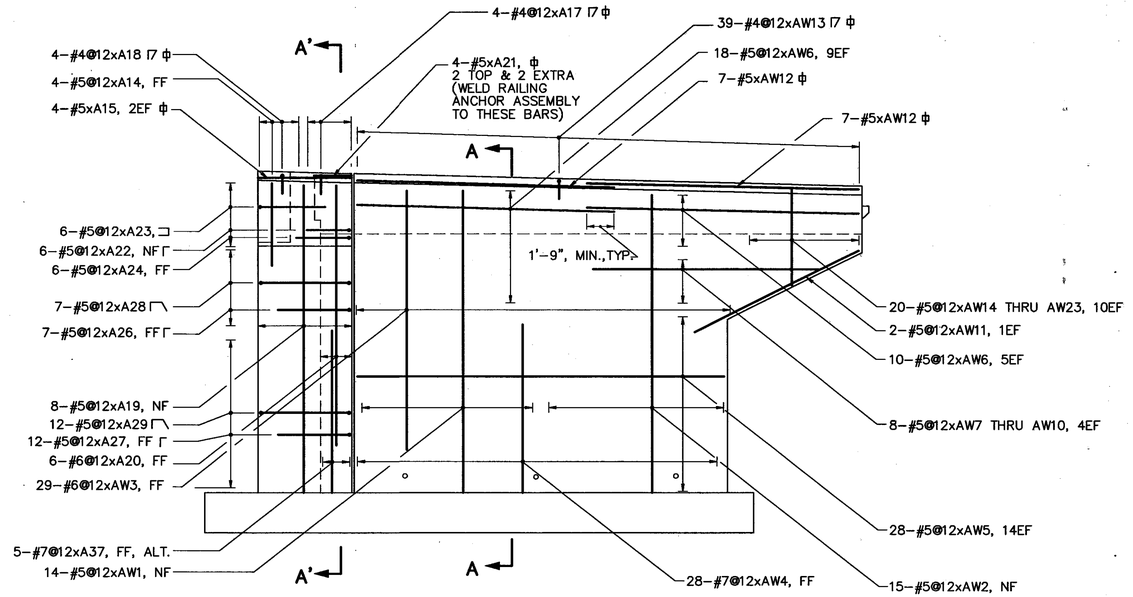

WEST WING REINFORCEMENT

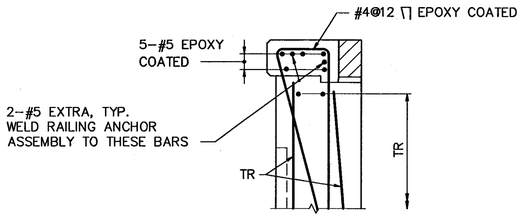

TYPICAL REINFORCEMENT
DETAIL AT CURB
SCALE : 3/4"=1'–0"

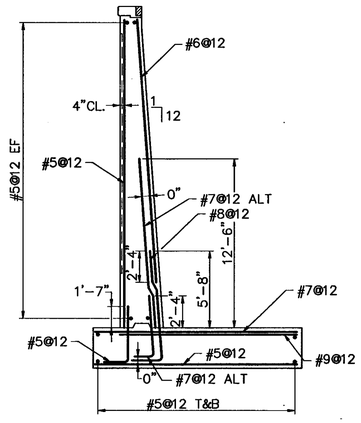

SECTION A–A
(SECTION A'–A' SIMILAR)

NOTES:

1. REINFORCING STEEL TO BE 2½" CLEAR FROM CONCRETE SURFACES EXCEPT AS NOTED.
2. TR = TYPICAL REINFORCING.

ϕ EPOXY COATED

SHEET SCALE : 3/16"=1'–0" OR AS NOTED

△	DESCRIPTION	BY	DATE
	REVISIONS		

FAY, SPOFFORD & THORNDIKE, INC
BOSTON, MA – LEXINGTON, MA – BEDFORD, NH

REVIEWED BY

STATE OF NEW HAMPSHIRE
DEPARTMENT OF TRANSPORTATION
BUREAU OF BRIDGE DESIGN

TOWN WINDHAM — BRIDGE NO. 139/094
FEDERAL PROJECT IM-T-93-1 (187)5 — STATE PROJECT 11628
LOCATION INTERSTATE–93 NORTHBOUND
OVER NH 111–A

ABUTMENT A WINGS REINFORCEMENT

	BY	DATE		BY	DATE
DESIGNED	L.M. BARTLEY	4/93	CHECKED	S.M. GUNN	4/93
DRAWN	D.O. MODRICKER	4/93	CHECKED	S.M. GUNN	4/93
TRACED	———		CHECKED	———	
QUANTITIES			CHECKED		

BRIDGE SHEET NO. 10 OF 21
FILE NUMBER 58–1–1

FEDERAL PROJ. NO	SHEET NO.	TOTAL SHEET
IM-T-93-1 (187)5	31	83

VMA17AWR (1=64)