Attachment 1

Conceptual Bridge Plans

Bascule Bridge

4/11/2014

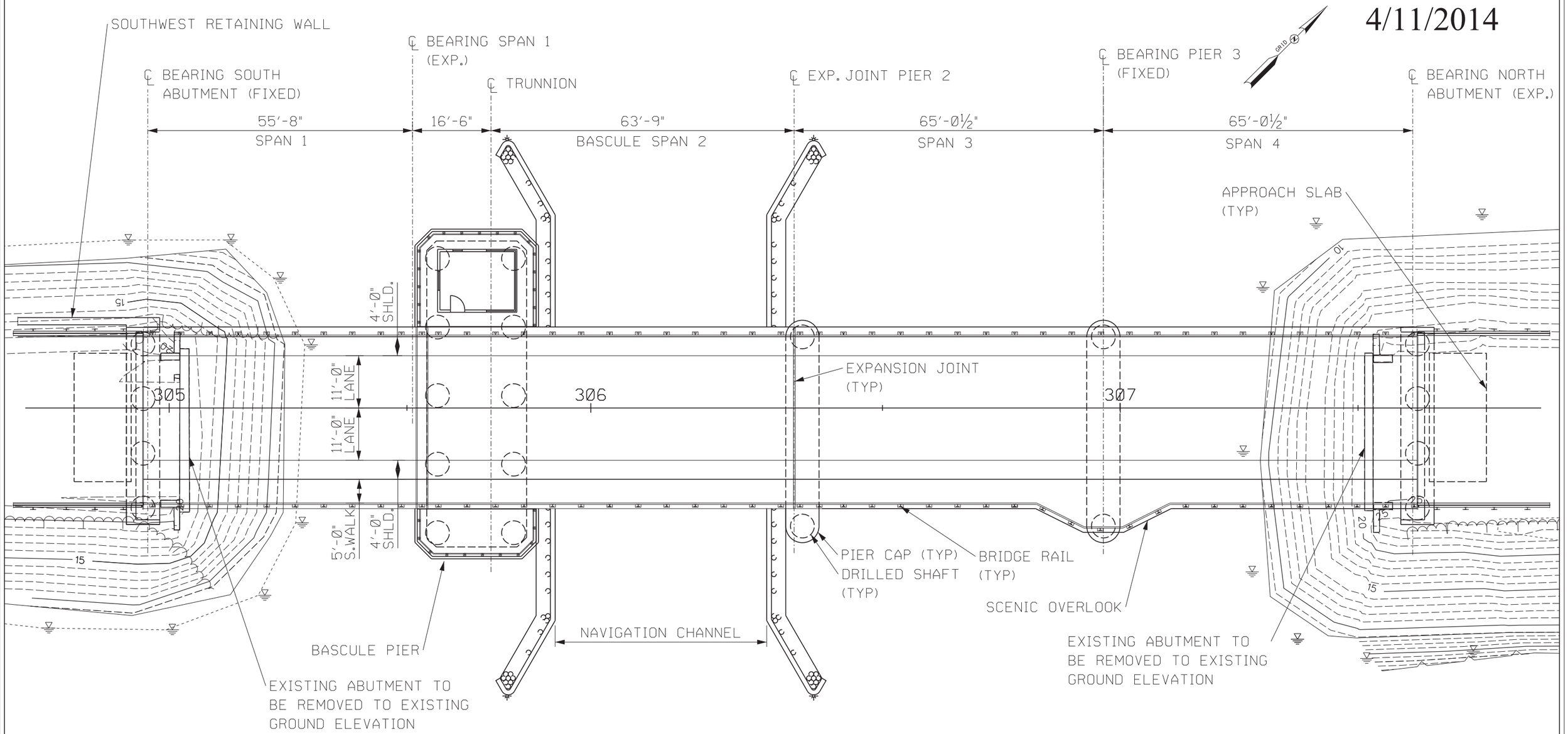

NEW CASTLE-RYE BRIDGE - 16127

CONCEPTUAL BRIDGE REPLACEMENT
GENERAL PLAN - BASCULE BRIDGE
SCALE: 1" = 20'-0"

Hoyle, Tanner & Associates, Inc.

HDR

THE STATE OF NEW HAMPSHIRE ★ DEPARTMENT OF TRANSPORTATION ★

STATE OF NEW HAMPSHIRE					
DEPARTMENT OF TRANSPORTATION - BUREAU OF BRIDGE DESIGN					
PROJECT:	16127 - NEW CASTLE - RYE BRIDGE				
DRAWN BY:	CAD	DATE:	4/11/2014	SHEET NO.	TOTAL SHEETS
CHECK BY:	HFP	DATE:	4/11/2014	1	6
APPROVED BY:	JFM	DATE:	4/11/2014		

4/11/2014

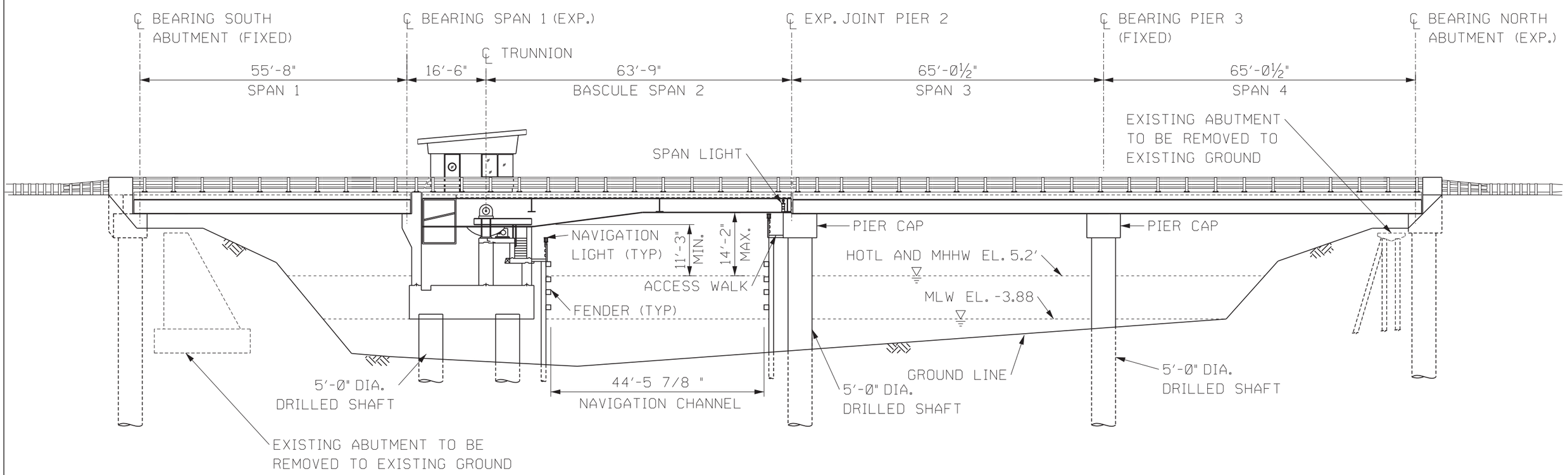

NEW CASTLE-RYE BRIDGE - 16127

CONCEPTUAL BRIDGE REPLACEMENT
ELEVATION - BASCULE BRIDGE
SCALE: 1" = 20'-0"

Hoyle, Tanner & Associates, Inc.

HDR

THE STATE OF NEW HAMPSHIRE ★ DEPARTMENT OF TRANSPORTATION ★

STATE OF NEW HAMPSHIRE				
DEPARTMENT OF TRANSPORTATION - BUREAU OF BRIDGE DESIGN				
PROJECT: 16127 - NEW CASTLE - RYE BRIDGE				
DRAWN BY: CAD	DATE: 4/11/2014	SHEET NO.	TOTAL SHEETS	
CHECK BY: HFP	DATE: 4/11/2014	2	6	
APPROVED BY: JFM	DATE: 4/11/2014			

4/11/2014

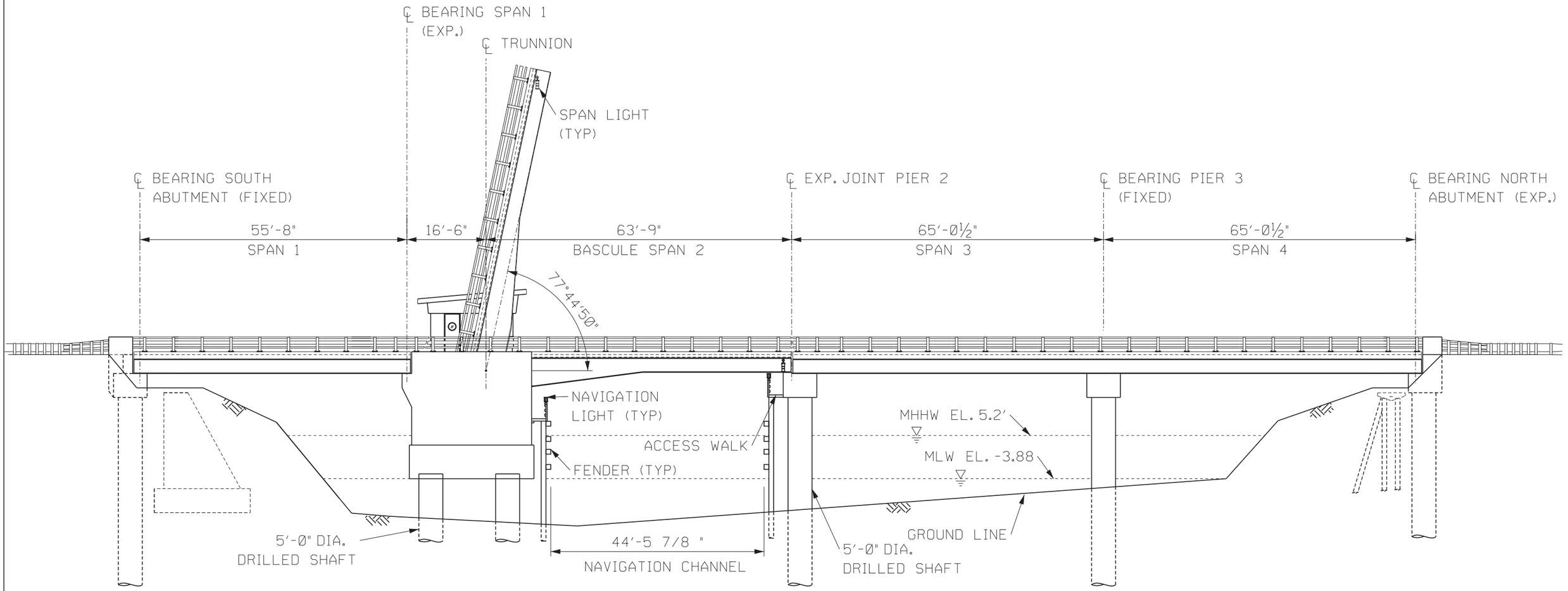

NEW CASTLE-RYE BRIDGE - 16127

CONCEPTUAL BRIDGE REPLACEMENT
ELEVATION - BASCULE BRIDGE WITH RAISED SPAN
SCALE: 1" = 20'-0"

Hoyle, Tanner & Associates, Inc.

HDR

THE STATE OF NEW HAMPSHIRE ★ DEPARTMENT OF TRANSPORTATION ★

STATE OF NEW HAMPSHIRE				
DEPARTMENT OF TRANSPORTATION - BUREAU OF BRIDGE DESIGN				
PROJECT: 16127 - NEW CASTLE - RYE BRIDGE				
DRAWN BY: CAD	DATE: 4/11/2014	SHEET NO.	TOTAL SHEETS	
CHECK BY: HFP	DATE: 4/11/2014	3	6	
APPROVED BY: JFM	DATE: 4/11/2014			

4/11/2014

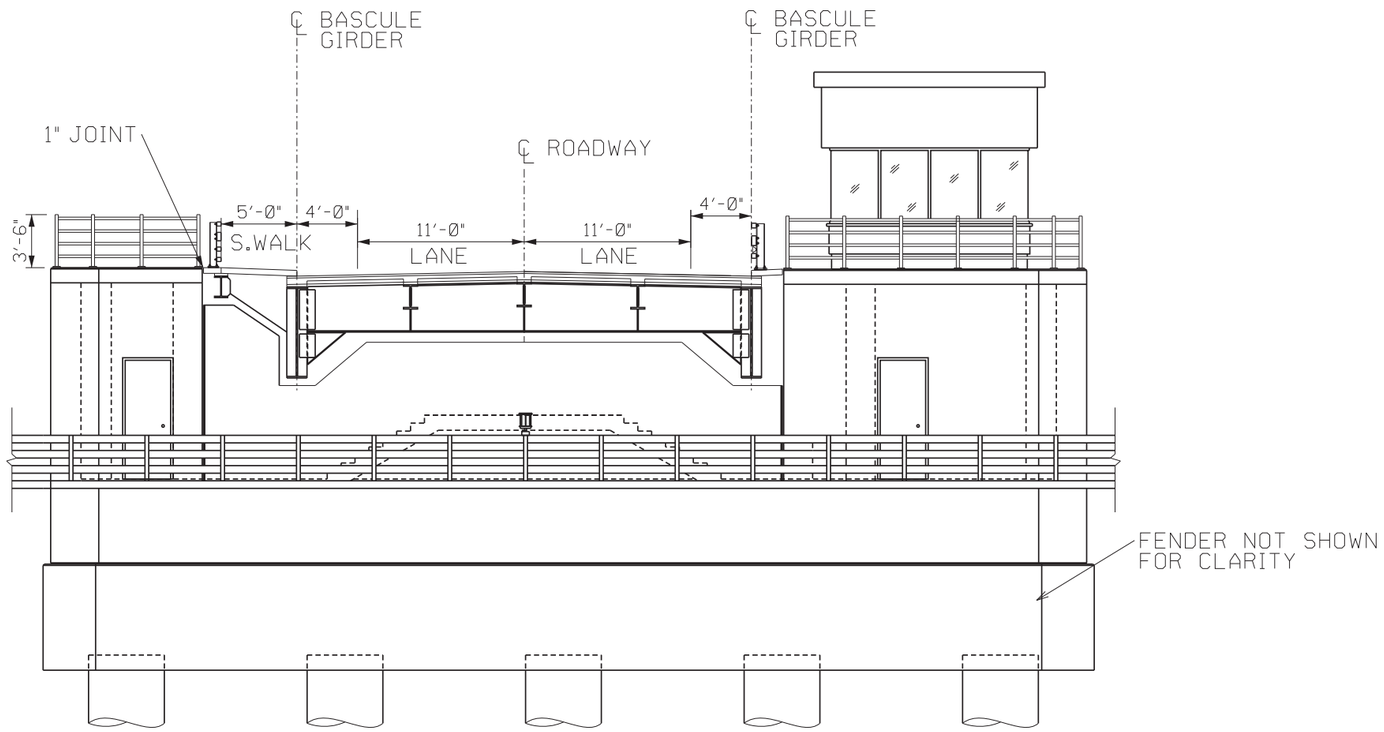

NEW CASTLE-RYE BRIDGE - 16127

TYPE, SIZE & LOCATION STUDY

SECTION AT BASCULE PIER - BASCULE BRIDGE

SCALE: 1" = 10'-0"

Hoyle, Tanner & Associates, Inc.

HDR

THE STATE OF NEW HAMPSHIRE ★ DEPARTMENT OF TRANSPORTATION ★

STATE OF NEW HAMPSHIRE				
DEPARTMENT OF TRANSPORTATION - BUREAU OF BRIDGE DESIGN				
PROJECT: 16127 - NEW CASTLE - RYE BRIDGE				
DRAWN BY: CAD	DATE: 4/11/2014	SHEET NO.	TOTAL SHEETS	
CHECK BY: HFP	DATE: 4/11/2014	4	6	
APPROVED BY: JFM	DATE: 4/11/2014			

4/11/2014

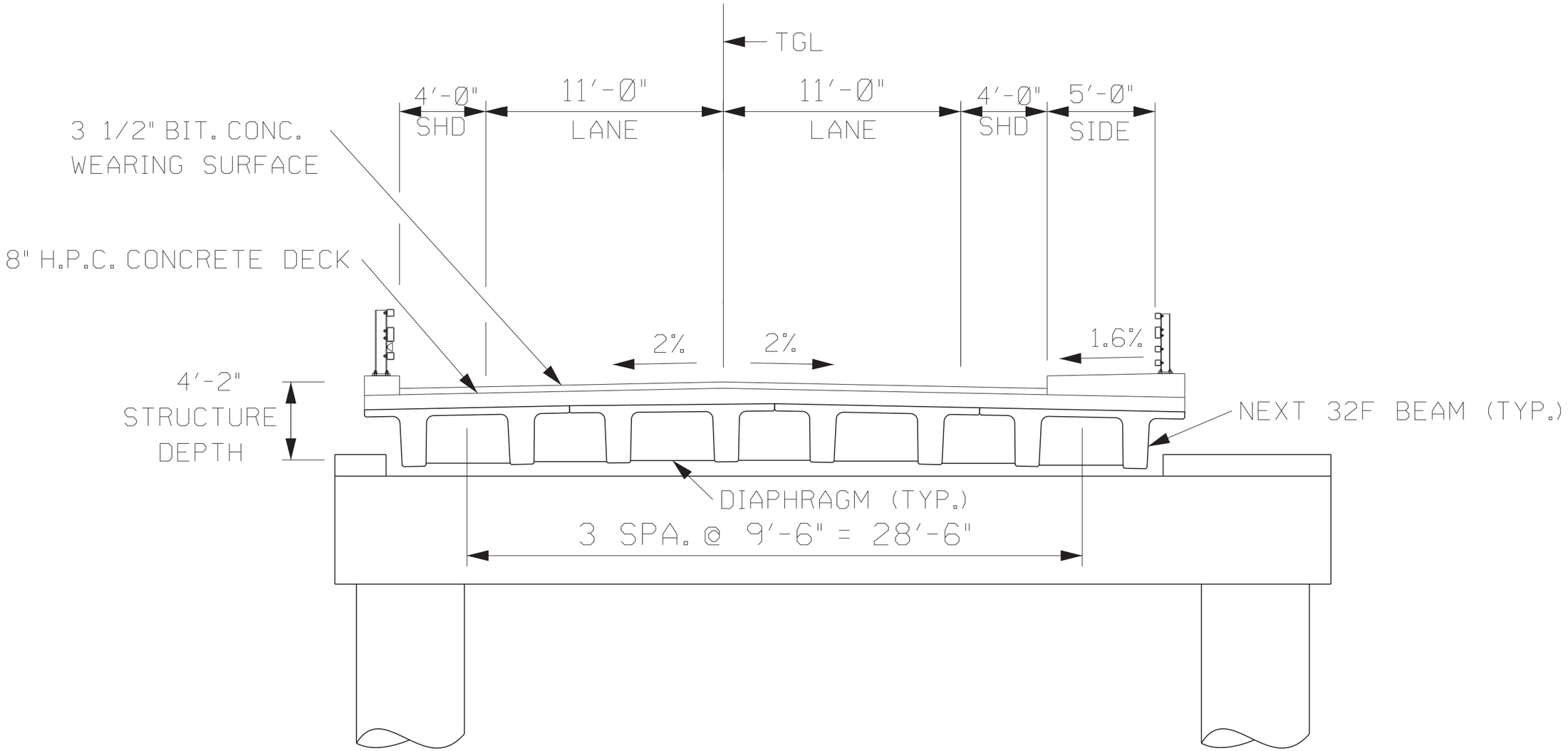

NEW CASTLE-RYE BRIDGE - 16127

TYPE, SIZE & LOCATION STUDY
CROSS SECTION AT PIER 2
BASCULE BRIDGE
SCALE: 1" = 5'-0"

Hoyle, Tanner & Associates, Inc.

HDR

THE STATE OF NEW HAMPSHIRE ★ DEPARTMENT OF TRANSPORTATION ★

STATE OF NEW HAMPSHIRE					
DEPARTMENT OF TRANSPORTATION - BUREAU OF BRIDGE DESIGN					
PROJECT:	16127 - NEW CASTLE - RYE BRIDGE				
DRAWN BY:	KCK	DATE:	11/01/2013	SHEET NO.	TOTAL SHEETS
CHECK BY:	JFM	DATE:	11/01/2013	5	6
APPROVED BY:	JFM	DATE:	11/01/2013		

4/11/2014

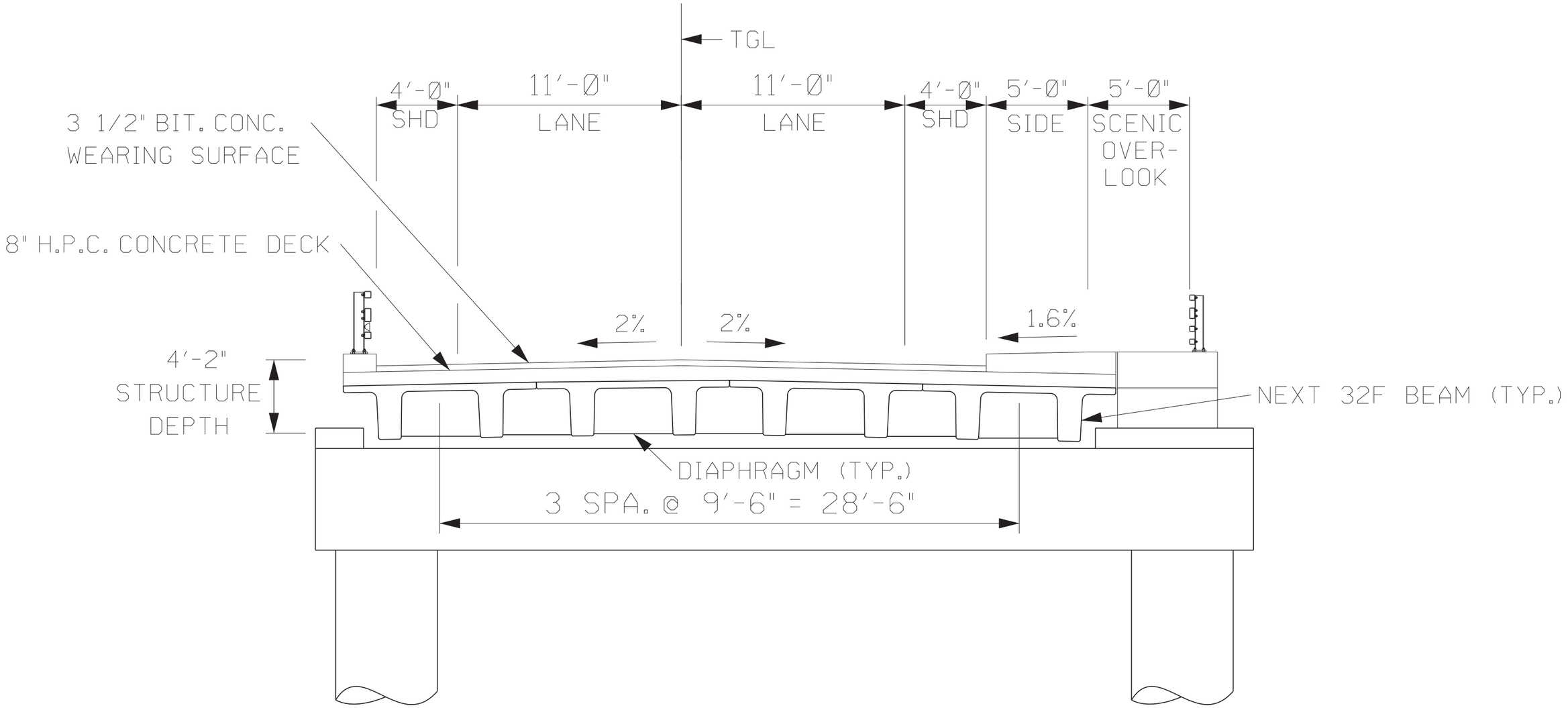

NEW CASTLE-RYE BRIDGE - 16127

TYPE, SIZE & LOCATION STUDY
CROSS SECTION AT PIER 3
BACULE BRIDGE
SCALE: 1" = 5'-0"

Hoyle, Tanner & Associates, Inc.

HDR

THE STATE OF NEW HAMPSHIRE DEPARTMENT OF TRANSPORTATION

STATE OF NEW HAMPSHIRE					
DEPARTMENT OF TRANSPORTATION - BUREAU OF BRIDGE DESIGN					
PROJECT:	16127 - NEW CASTLE - RYE BRIDGE				
DRAWN BY:	KCK	DATE:	11/01/2013	SHEET NO.	TOTAL SHEETS
CHECK BY:	JFM	DATE:	11/01/2013	6	6
APPROVED BY:	JFM	DATE:	11/01/2013		

Attachment 2

Conceptual Bridge Plans

Fixed Bridge

4/11/2014

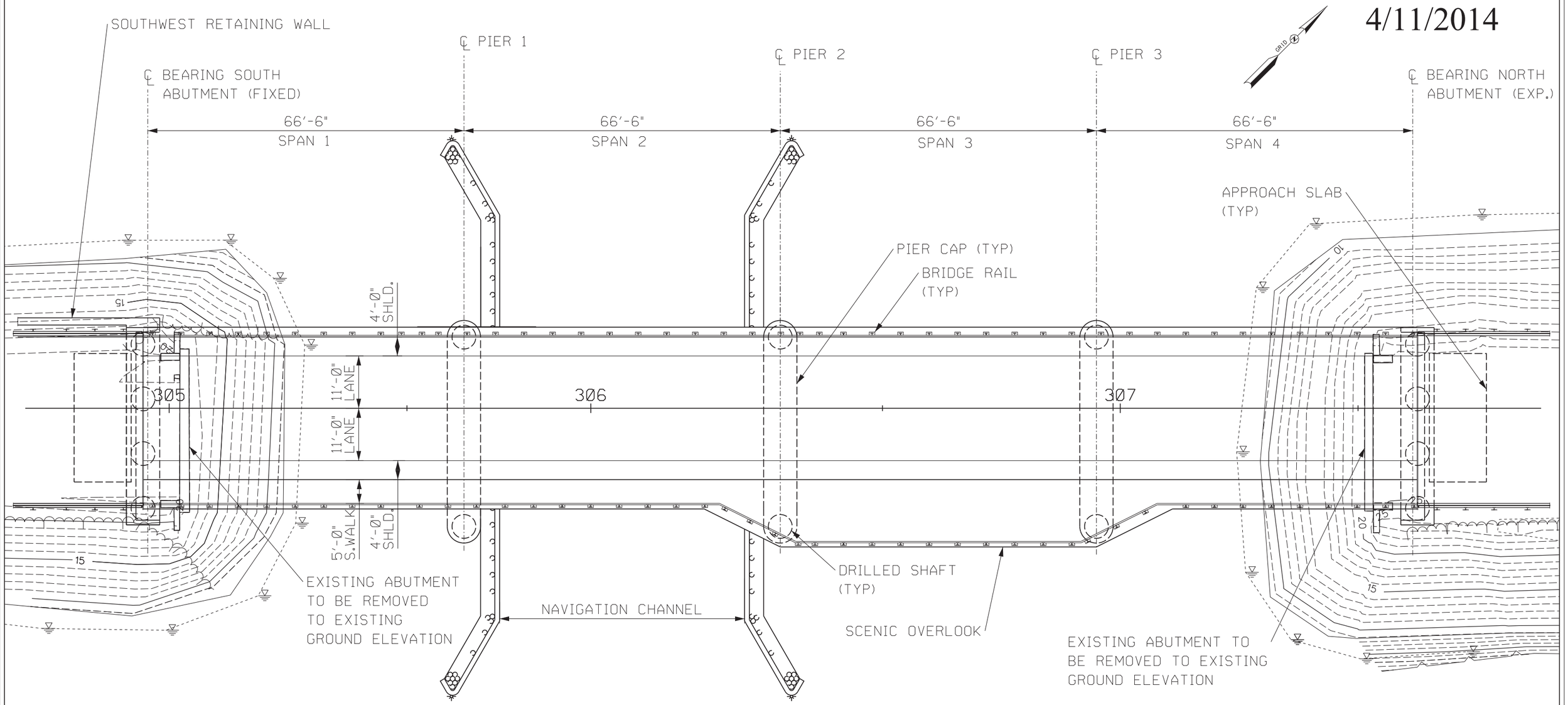

NEW CASTLE-RYE BRIDGE - 16127

CONCEPTUAL BRIDGE REPLACEMENT
GENERAL PLAN - FIXED BRIDGE
SCALE: 1" = 20'-0"

Hoyle, Tanner & Associates, Inc.

HDR

THE STATE OF NEW HAMPSHIRE ★ DEPARTMENT OF TRANSPORTATION ★

STATE OF NEW HAMPSHIRE					
DEPARTMENT OF TRANSPORTATION - BUREAU OF BRIDGE DESIGN					
PROJECT:	16127 - NEW CASTLE - RYE BRIDGE				
DRAWN BY:	KCK	DATE:	4/11/2014	SHEET NO.	TOTAL SHEETS
CHECK BY:	KCK	DATE:	4/11/2014	1	4
APPROVED BY:	JFM	DATE:	4/11/2014		

4/11/2014

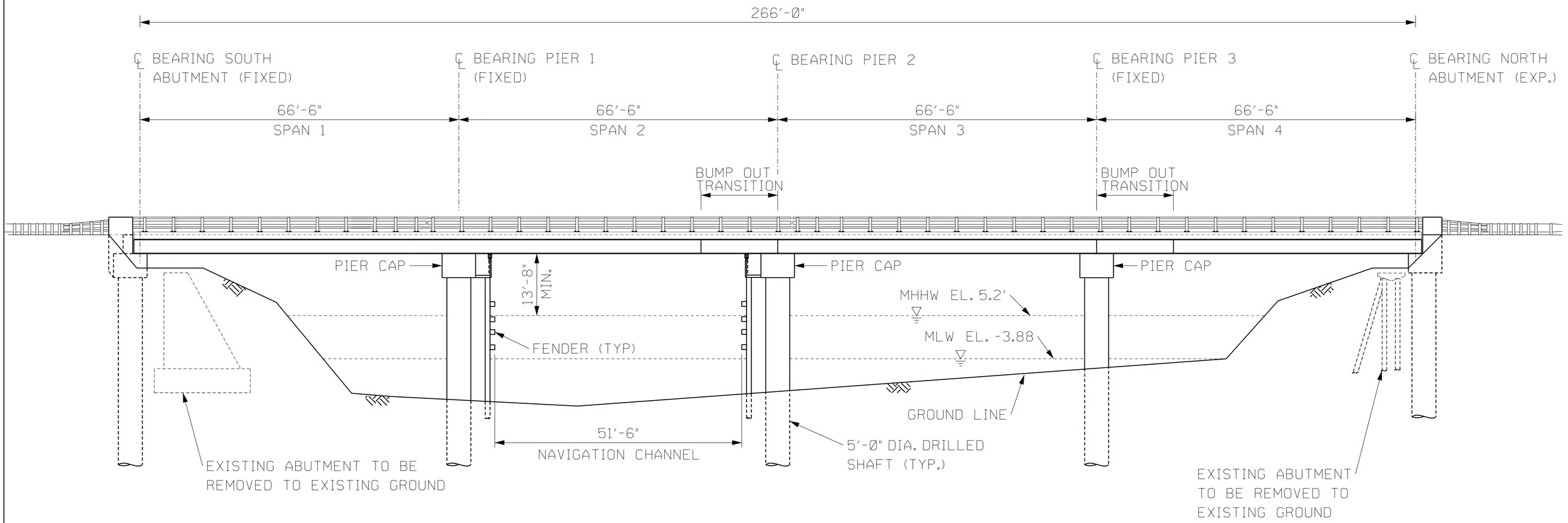

NEW CASTLE-RYE BRIDGE - 16127

CONCEPTUAL BRIDGE REPLACEMENT
ELEVATION - FIXED BRIDGE
SCALE: 1" = 20'-0"

Hoyle, Tanner & Associates, Inc.

HDR

THE STATE OF NEW HAMPSHIRE ★ DEPARTMENT OF TRANSPORTATION ★

STATE OF NEW HAMPSHIRE					
DEPARTMENT OF TRANSPORTATION - BUREAU OF BRIDGE DESIGN					
PROJECT:	16127 - NEW CASTLE - RYE BRIDGE				
DRAWN BY:	SJB	DATE:	4/11/2014	SHEET NO.	TOTAL SHEETS
CHECK BY:	KCK	DATE:	4/11/2014	2	4
APPROVED BY:	JFM	DATE:	4/11/2014		

4/11/2014

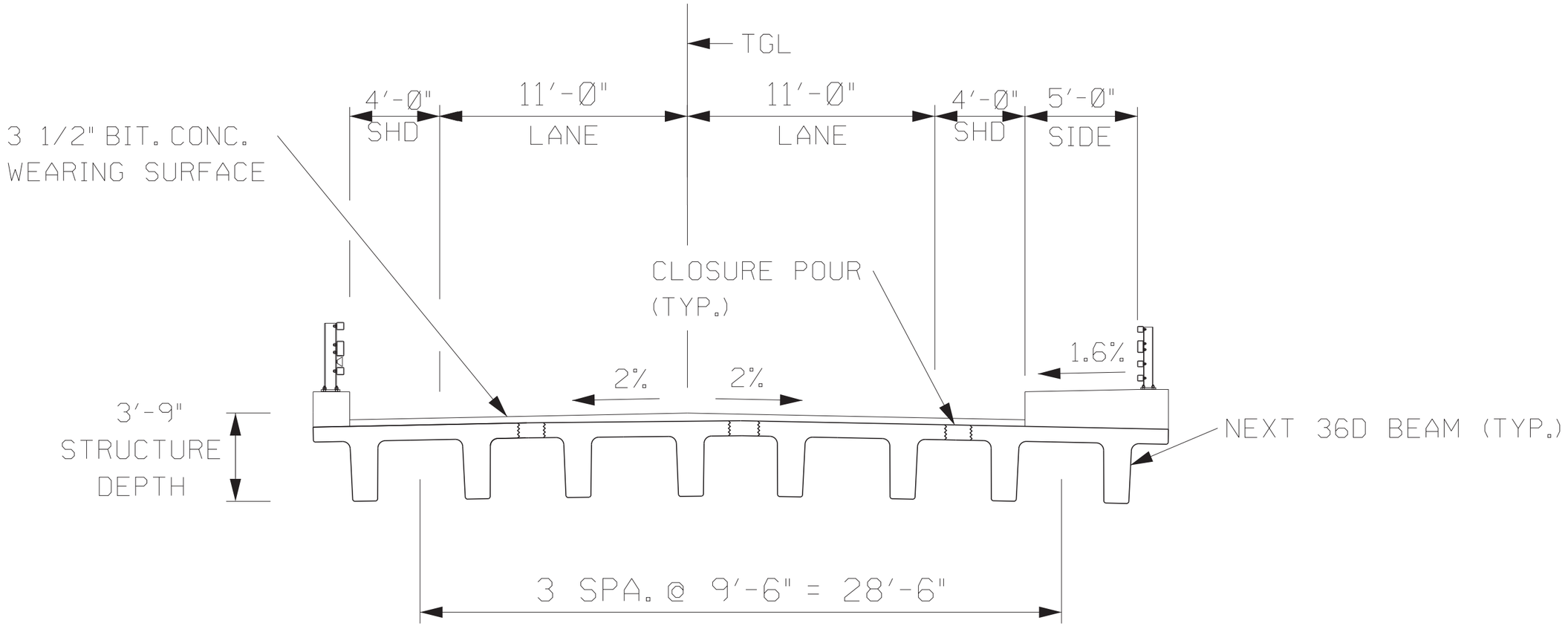

NEW CASTLE-RYE BRIDGE - 16127

TYPE, SIZE & LOCATION STUDY
TYPICAL CROSS SECTION
FIXED BRIDGE
SCALE: 1" = 5'-0"

Hoyle, Tanner & Associates, Inc.

HDR

THE STATE OF NEW HAMPSHIRE ★ DEPARTMENT OF TRANSPORTATION ★

STATE OF NEW HAMPSHIRE					
DEPARTMENT OF TRANSPORTATION - BUREAU OF BRIDGE DESIGN					
PROJECT:	16127 - NEW CASTLE - RYE BRIDGE				
DRAWN BY:	KCK	DATE:	4/11/2014	SHEET NO.	TOTAL SHEETS
CHECK BY:	JFM	DATE:	4/11/2014	3	4
APPROVED BY:	JFM	DATE:	4/11/2014		

4/11/2014

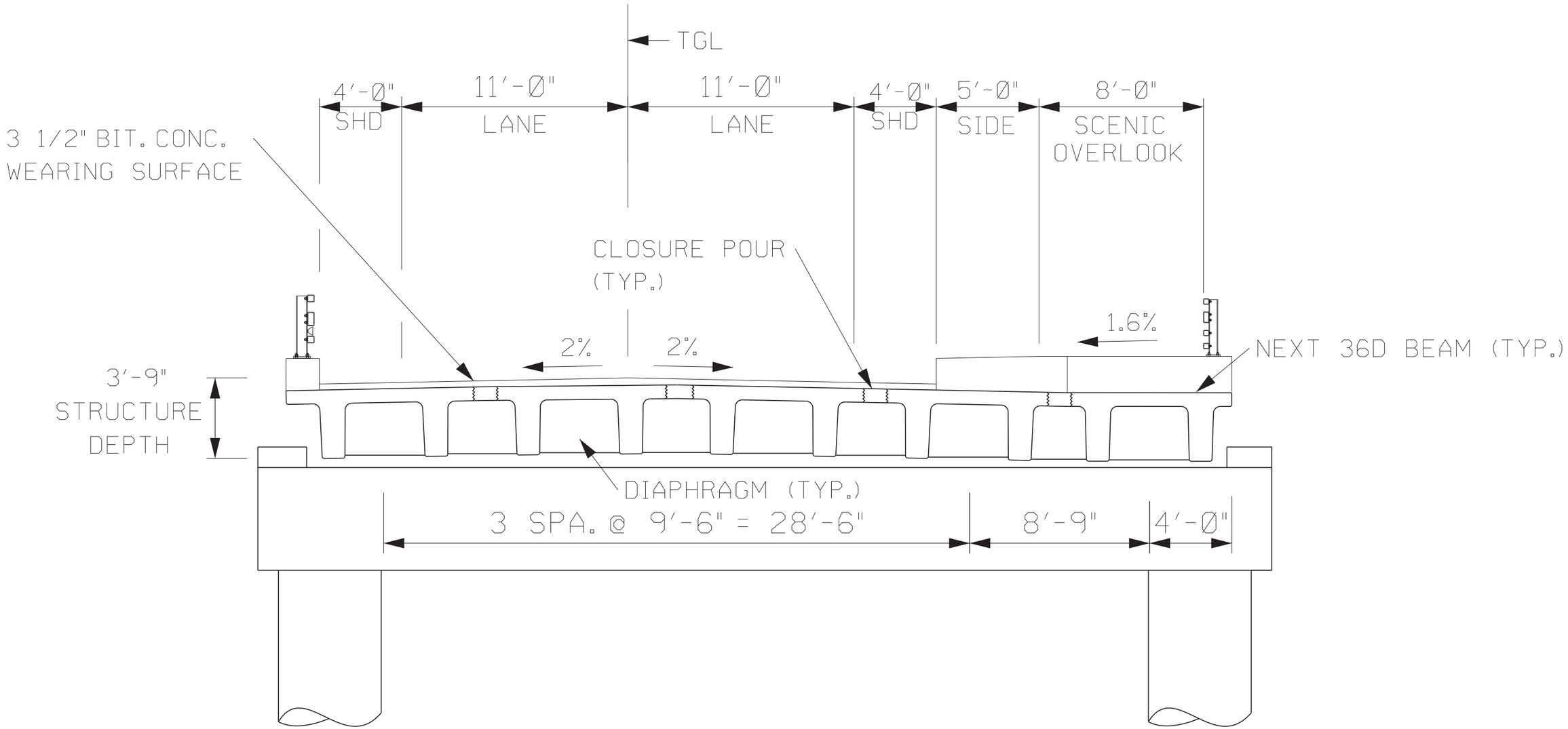

NEW CASTLE-RYE BRIDGE - 16127

TYPE, SIZE & LOCATION STUDY
CROSS SECTION AT PIER 2
FIXED BRIDGE
SCALE: 1" = 5'-0"

Hoyle, Tanner & Associates, Inc.

HDR

THE STATE OF NEW HAMPSHIRE ★ DEPARTMENT OF TRANSPORTATION ★

STATE OF NEW HAMPSHIRE				
DEPARTMENT OF TRANSPORTATION - BUREAU OF BRIDGE DESIGN				
PROJECT: 16127 - NEW CASTLE - RYE BRIDGE				
DRAWN BY: KCK	DATE: 4/11/2014	SHEET NO.	TOTAL SHEETS	
CHECK BY: JFM	DATE: 4/11/2014	4	4	
APPROVED BY: JFM	DATE: 4/11/2014			

Attachment 3

Existing Bridge Plans

STATE	PROJ. NO.	SHEET NO.	TOTAL SHEETS
N.H.			

INDEX OF SHEETS

SHEET NO. 1 TITLE PAGE
2-6 Bridge Plans
STANDARD SHEET NO CS-1 REVISED NOV. 15, 1973
" " " CS-2 " NOV. 15, 1973
" " " CS-3 " MAY 27, 1974
" " " CS-4 " MAY 27, 1974

STATE OF NEW HAMPSHIRE
DEPARTMENT OF PUBLIC WORKS AND HIGHWAYS

PLANS OF PROPOSED
FEDERAL AID SECONDARY PROJECT
S-245(1)
N.H. RTE. 1-B OVER LITTLE HARBOR
N.H. PROJECT NO.'S P-2054 & P-2054-A
DECK REPLACEMENT & RECONSTRUCTION

THIS PROJECT TO BE CONSTRUCTED IN ACCORDANCE WITH STANDARD SPECIFICATIONS DATED 1974

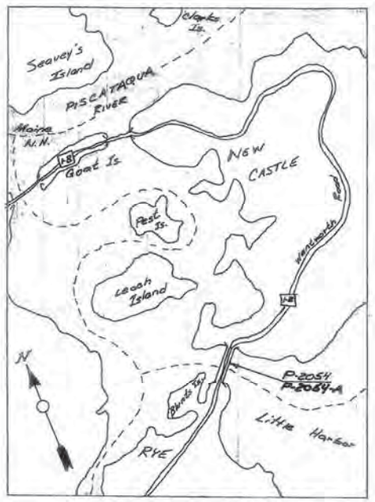

LOCATION MAP

0 ½ 1
Scale in Miles

TOWNS OF RYE-NEW CASTLE
COUNTY OF ROCKINGHAM

RECOMMENDED FOR APPROVAL: DATE 11/7/74

Bruel W Webb
DEPUTY COMMISSIONER AND CHIEF ENGINEER

APPROVED:

R H Sutaker
COMMISSIONER

Floyd L Avery
SECONDARY ROADS ENGINEER

CONVENTIONAL SIGNS

STATE LINE		R O W LINE	
TOWN LINE		SURVEY LINE	
FENCE		CULVERT	
STONE WALL		POWER POLE	
UNFENCED PROPERTY		TELEPHONE POLE	
TRAVELED WAY		TELEGRAPH POLE	
RAILROAD		JOINT POWER & TEL. POLE	
RETAINING WALL		GROUND ELEVATION (LEFT)	
SEWER MANHOLE		GRADE ELEVATION (RIGHT)	
HYDRANT		SLOPE LINE	
LEDGE		CATCH BASIN	
BRUSH LINE		DROP INLET	
SWAMP		BOUND	
PROPERTY PARCEL NO.	2	CLEARING & GRUBBING AREA	E

DRAWN BY S.R.M. DATE 12-18-72
CHECKED BY J.O.B. DATE 5-2-73

PROJ. NO.	SHEET NO.	TOTAL SHEETS
S-245(1)	1	6

2-8-2-2

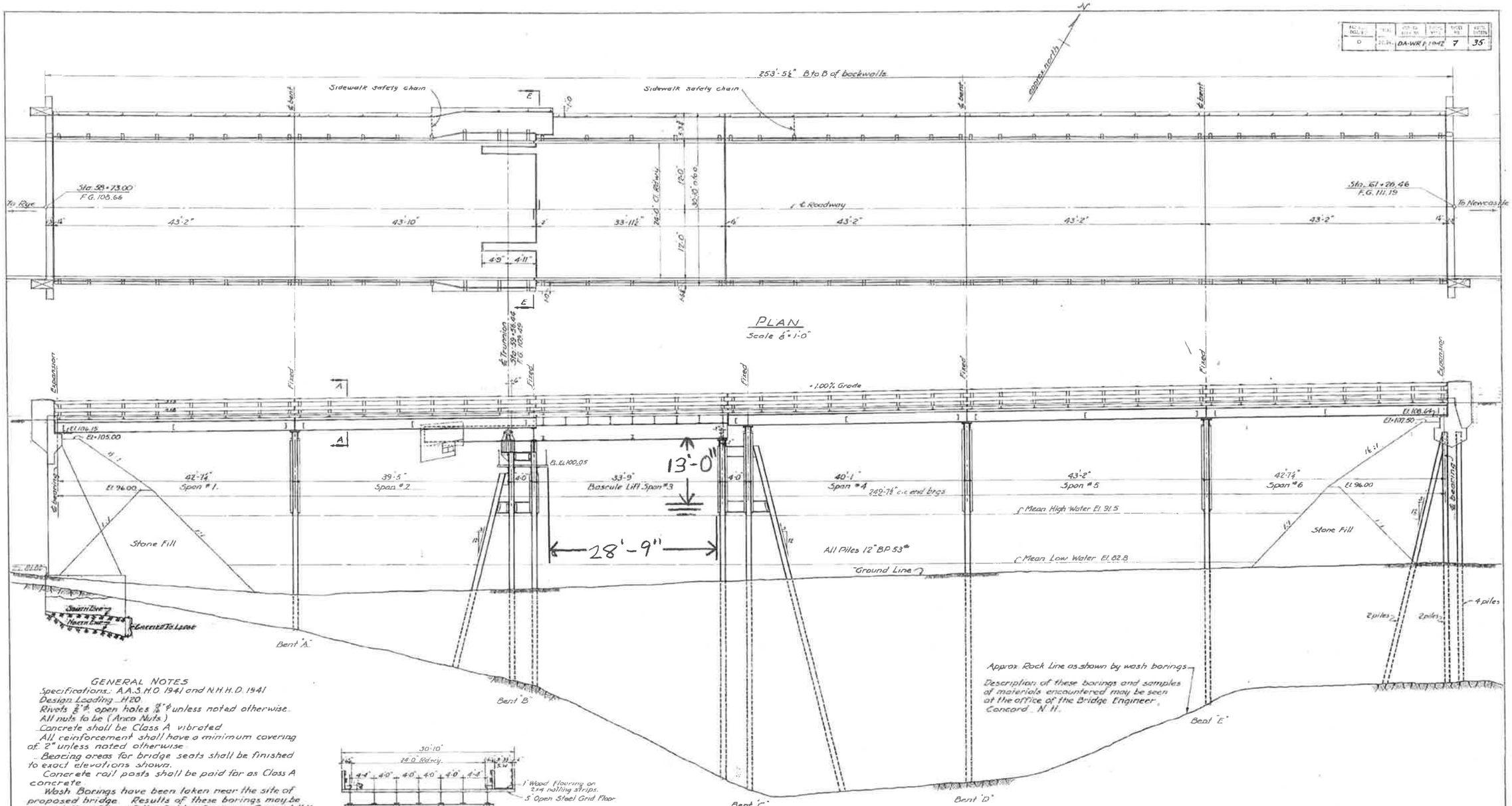

SECTIONAL ELEVATION ON CENTER LINE
Scale 1/8" = 1'-0"

GENERAL NOTES

Specifications: A.A.S.H.O. 1941 and N.H.H.D. 1941
Design Loading H20
Rivets ⅞" ϕ, open holes 15/16" ϕ unless noted otherwise.
All nuts to be (Anco Nuts)
Concrete shall be Class A vibrated
All reinforcement shall have a minimum covering of 2" unless noted otherwise
Bearing areas for bridge seats shall be finished to exact elevations shown.
Concrete rail posts shall be paid for as Class A concrete
Wash Borings have been taken near the site of proposed bridge. Results of these borings may be seen at the office of the Bridge Engineer, Concord, N.H.
Bridge Gates shall be constructed on approaches as shown on Sheet No. 6
Material from present Superstructure shall be salvaged as directed by the Engineer.
Lumber for boardwalk + railing shall be No. 1 Spruce or equivalent.

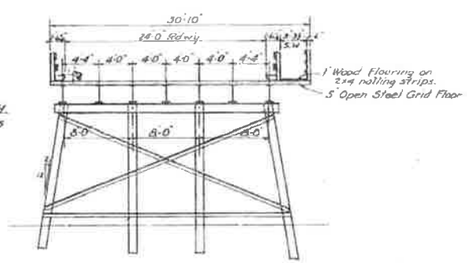

SECTION A-A.

0		DA-WR 1	1942	7	35

N. H. Project No. P-623

STATE OF NEW HAMPSHIRE
HIGHWAY DEPARTMENT BRIDGE DIVISION

TOWN PROJECT RYE-NEWCASTLE DA-WR-1
OVER LITTLE HARBOR
LOCATION WENTWORTH-BY-THE-SEA
ROAD NEWCASTLE (ROUTE 1B) BRIDGE No. 006/011

GENERAL PLAN, ELEVATION & SECTION

DESIGNED BY AMW/RDF DATE 9-41 DRAWN BY CBS/RDF DATE 9-41
CHECKED BY R.J.R. DATE 12/29/41 2-8-2-2

Traced by W.H.P.

DA-WR 1 7 35

DESCRIPTION	BY	DATE
End Posts & Notes	[illegible]	1-9-42
Sidewalk changed from steel to wood	W.H.P.	2-12-42
Road Rail changed to wood	W.H.P.	4/7/42

W.H.P. 10-24-41

FED. ROAD DIV. NO.	STATE	PROJ.	FISCAL YEAR	SHEET NO.	TOTAL SHEETS
1	N.H.				

Note: for details of sections B-B" C-C" & D"-D" refer to sht 2 of 5

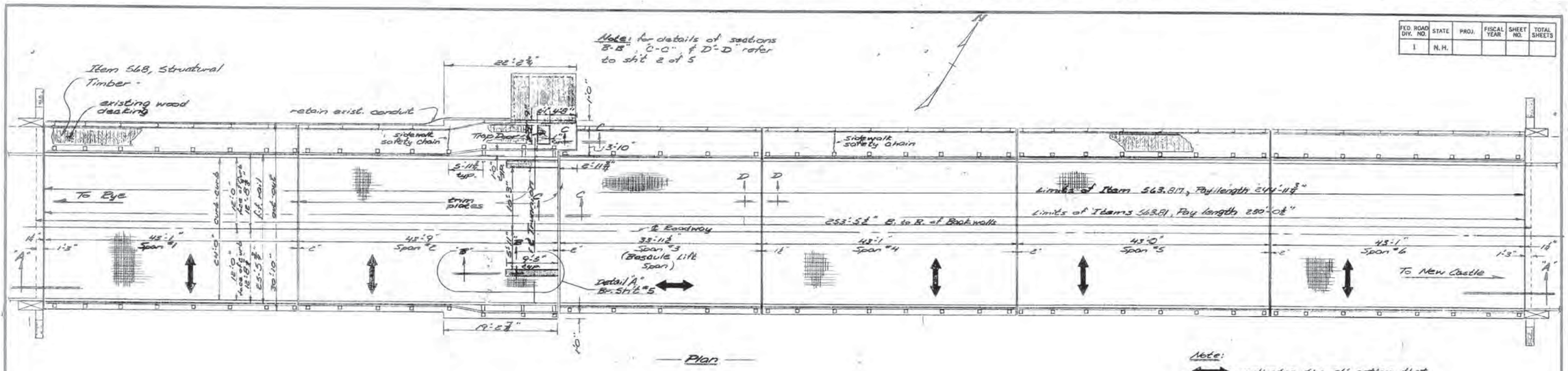

— Plan —

Note:
⟷ indicates the direction that the main members of the grid deck shall span

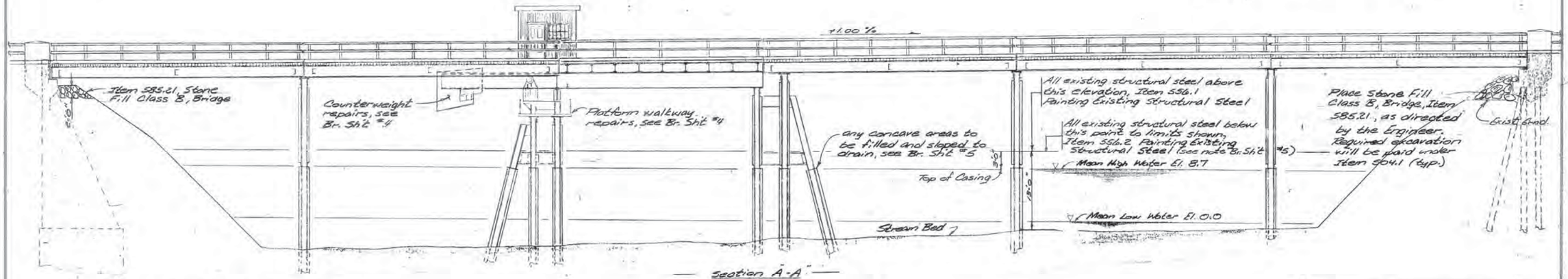

— Section A-A" —

— SUMMARY of PROJECT NO. P-2054 QUANTITIES —

Item No.	Item	Quant.	
403.1	Hot Bituminous Pavement	10 tons	
502	Removal of Existing Bridge Structure	1 unit	
304.1	Common Bridge Excavation	35 c.y.	
512.01	Preparation for Concrete Repairs	1 unit	
512.02	Preparation for Concrete Repairs	1 unit	
512.03	Preparation for Concrete Repairs	1 unit	
520.02	Concrete Class P for Patching	.8 c.y.	
520.11	Concrete Class A, Footings	3.1 c.y.	
520.12	Concrete Class A, Above footings	4.7 c.y.	
525.11	Epoxy Mortar for Patching Hor. Conc. Surf.	6.0 S.F.	⚠1 C.F.
525.12	Epoxy Mortar for Patching Vert. Conc. Surf.	2.8 S.F.	⚠1 C.F.
526.1	Crew and Equipment Injecting Epoxy	3 days	
526.2	Epoxy for Epoxy Injection	10 gal.	
596.1	Epoxy Coating for Concrete	37 gal.	
544	Reinforcing Steel	1077 lbs.	
550.1	Structural Steel	1 unit	
555.1	Steel Grid Floor (open)	7748 S.F.	
563.81	Rehabilitation of Bridge Railing	500.1 L.F.	
563.817	Rehab. of Bridge Sidewalk Railing	245.0 L.F.	
568	Structural Timber	3.40 MBM	

585.21	Stone Fill Class - B (Bridge)	46 c.y.
603.4012	12" S.C.C. Steel Pipe, .064" ins. spec. enc.	12 L.F.
618	Uniformed officers and Flagmen	700 Hrs.
619.1	Maintenance of Traffic incl. dust laying	1 unit
619.2	Construction Signs & Warning Devices	1 unit
692	Mobilization	1 unit
698.3	Field Office (Modified)	1 unit
100E	Repairs or Replacements as Needed	*

— SUMMARY of PROJECT NO. P-2054-A QUANTITIES —

Item No.	Item	Quant.
556.1	Painting Existing Structural Steel	1 unit
556.2	Painting Existing Structural Steel	1 unit
100E.1	Repairs or Replacements as Needed	*

— General Notes —

1. Design Loading: H20-44 for Existing Bridge.
2. Specifications: N.H.D.P.W. & H. 1974 & AASHTO 1974 ammended to date.
3. A minimum of a one line 10ft. wide traffic lane shall be maintained at all times during deck installation

— Subsidiary Items —

1.	⅜"x4"x4" neoprene pad	Br. Sht	e
e.	⅜"x3"x3" neoprene pad	"	3
3.	⅜"Ø x6" std. bolts & nuts	"	4
4.	hard pressed asbestos in bridge shoes	"	5
5.	asphaltic material	"	5

Plans of the existing bridge are on file at the John O. Morton Building, Concord, New Hampshire.

*Not Bid Items
Item 100E $5,000.00
Item 100E.1 $5,000.00

scale: ½"=1'-0"

STATE OF NEW HAMPSHIRE
DEPARTMENT OF PUBLIC WORKS AND HIGHWAYS
BRIDGE DESIGN DIVISION

TOWN Rye - New Castle — BRIDGE NO. 066/071
FEDERAL PROJECT S.245(1) — STATE PROJECT P-2054-A
LOCATION N.H. 1-B over Little Harbor

General Plan and Elevation

	BY	DATE		BY	DATE
DESIGNED	SRH	11/72	CHECKED	JDB	4/73
DRAWN	SRH	11/72	CHECKED	JDB	4/73
TRACED	SRH	11/72	CHECKED	JDB	4/73
QUANTITIES	SRH	11/72	CHECKED	JDB	4/73

⚠1	Change unit from C.Y. to C.F.	SRH	11/73
Δ	DESCRIPTION	BY	DATE

REVISIONS

REVIEWED BY

BRIDGE SHEET NO.	
2	OF 5
FILE NUMBER	
2-B-2-2	

PROJ. NO.	SHEET NO.	TOTAL SHEETS
S-245(1)	5	6

The Draftsboard, Inc.

CO. RECD INIT. NO.	CO. NO.	CO. APP. INIT.	TOTAL SHEETS	SHEET NO.	TOTAL SHEETS
9		DA-WR1	1942	8	35

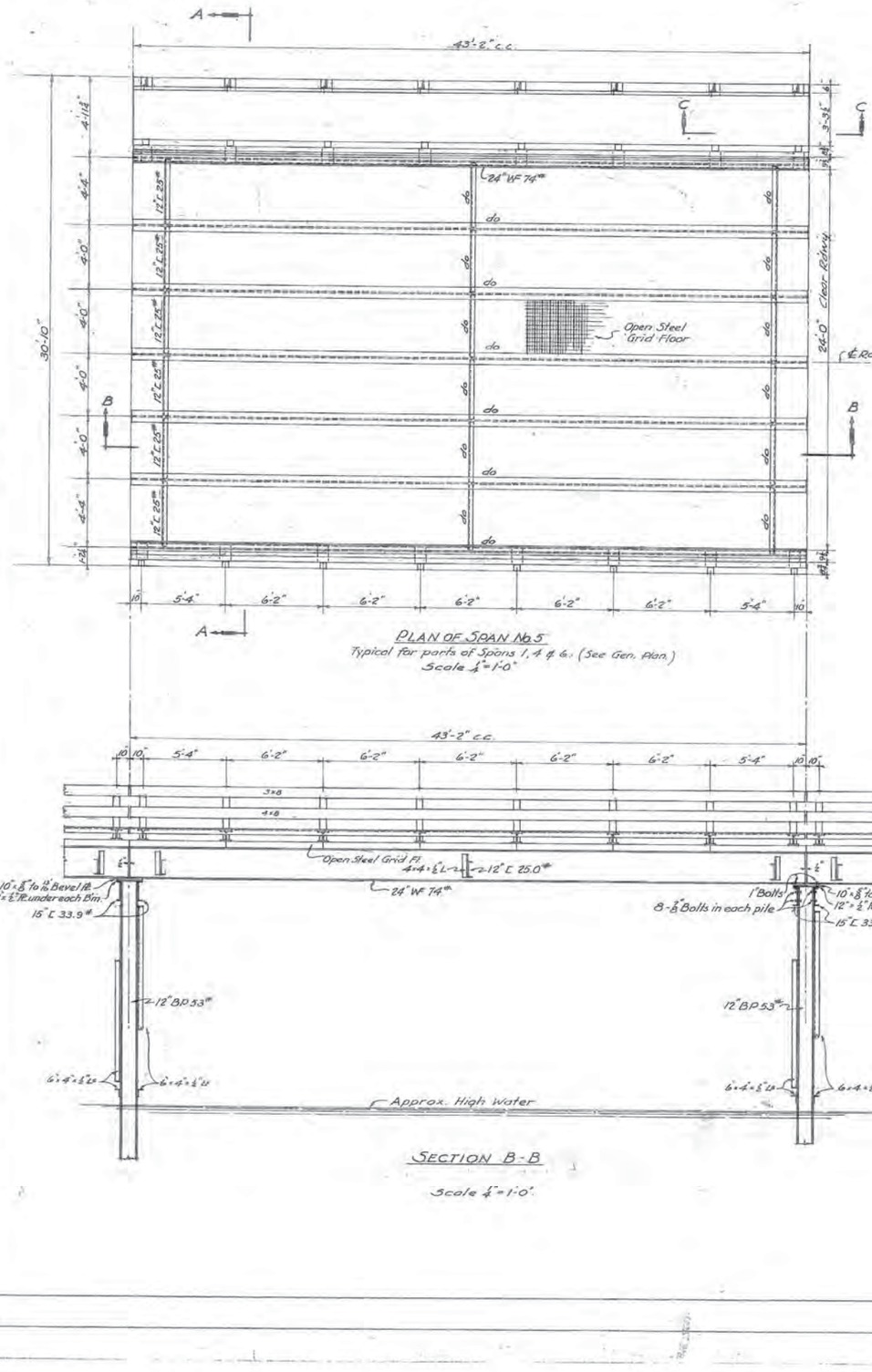

PLAN OF SPAN No 5
Typical for parts of Spans 1, 4 & 6. (See Gen. Plan.)
Scale ¼"=1'-0"

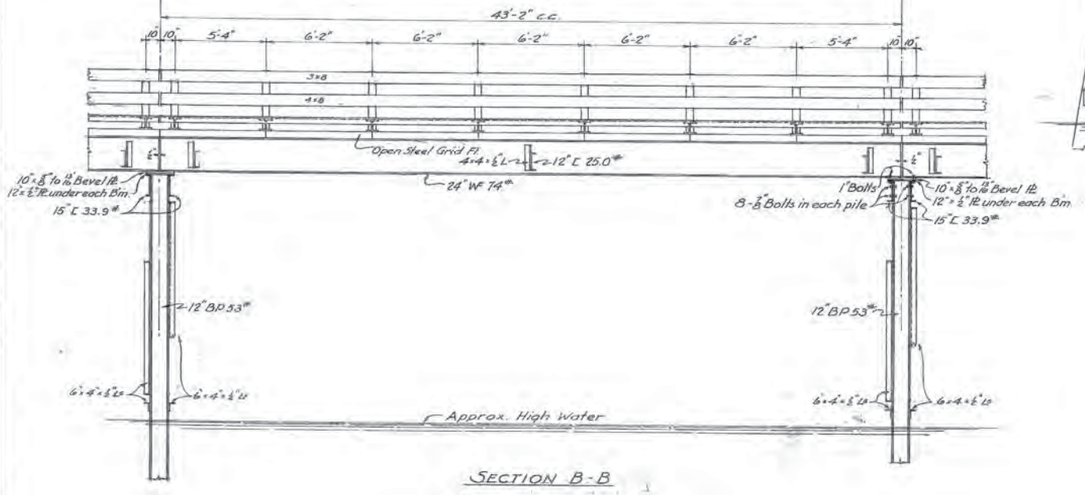

SECTION B-B
Scale ¼"=1'-0"

Provide ½" U-bolt at each curb support for Hotel Co. 2" Std. Water Pipe. Cost of relaying water pipe to be paid for under Item # 41.1A

Note:— Roadway Rail to be paid for as Item 44 Bridge Railing 'D'. Sidewalk Rail to be paid for as Item 44 Bridge Railing D'. All lumber for sidewalk flooring, nailing strips and railing to be treated with Chromated Zinc Chloride. The min. amount of dry salt retained shall be .75 lb. per cu. ft. (100 lbs reqd.)

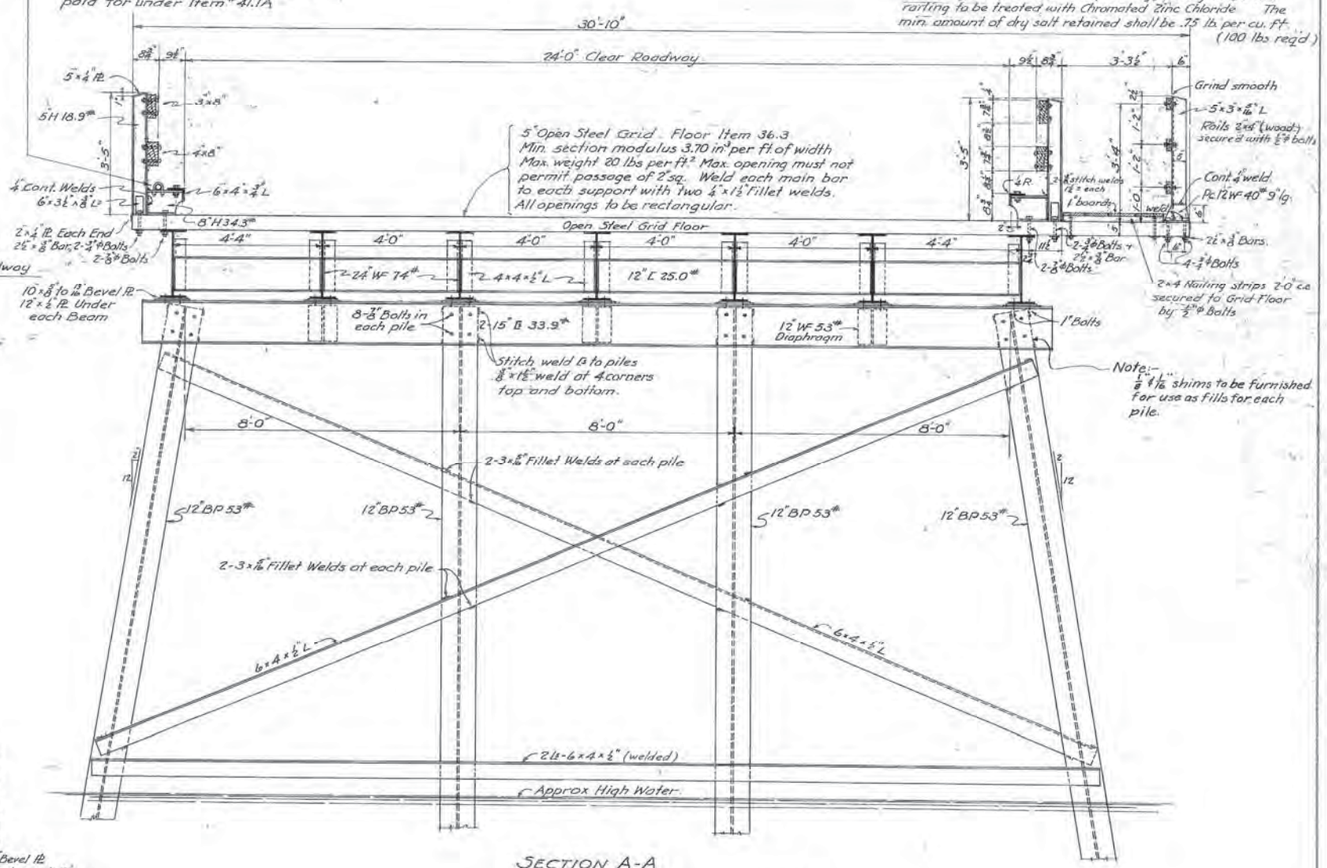

SECTION A-A
Scale ½"=1'-0"

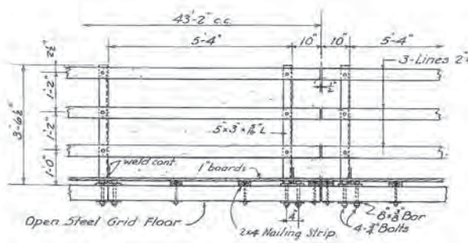

SECTION C-C
Scale ½"=1'-0"

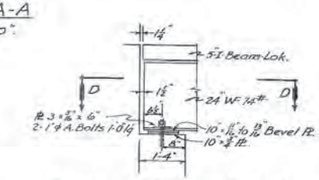

ELEVATION of ABUTMENT END of SPAN No 1
Scale ½"=1'-0"

SECTION D-D

Note:— Abutment end of Span # 6 the same opposite hand.

REVISIONS		
DESCRIPTION	BY	DATE
Notes	EGS	11-9-42
Change Sidewalk Rail & Floor to wood	W.H.P.	2-18-42
Stitch welds added rail posts to curb	"	1-27-42
Change Road Rail to wood	"	4-2-42

N. H. PROJECT No. P-623

STATE OF NEW HAMPSHIRE
HIGHWAY DEPARTMENT BRIDGE DIVISION

TOWN (FUEL) R.F.D. Newcastle DA-WR1
OVER Little Harbor
LOCATION Wentworth-By-The-Sea
ROAD Newcastle (Route 1B) BRIDGE NO. 066/071
PLAN SECTIONS SPANS 1, 4, 5 & 6
DESIGNED A.H.W. 11/41 DRAWN BY C.R.S. DATE 11/41
CHECKED R.J.P. DATE 12-29-41 FILE NO. 2-8-2-2

PROJ. NO.	SHEET NO.	TOTAL SHEETS
DA-WR1	8	35

Traced by W.H.P.

W.H.P. Dec '41
TRACING CHECKED BY ..... DATE .....
QUANTITIES COMPUTED BY ..... DATE .....
QUANTITIES CHECKED BY ..... DATE .....

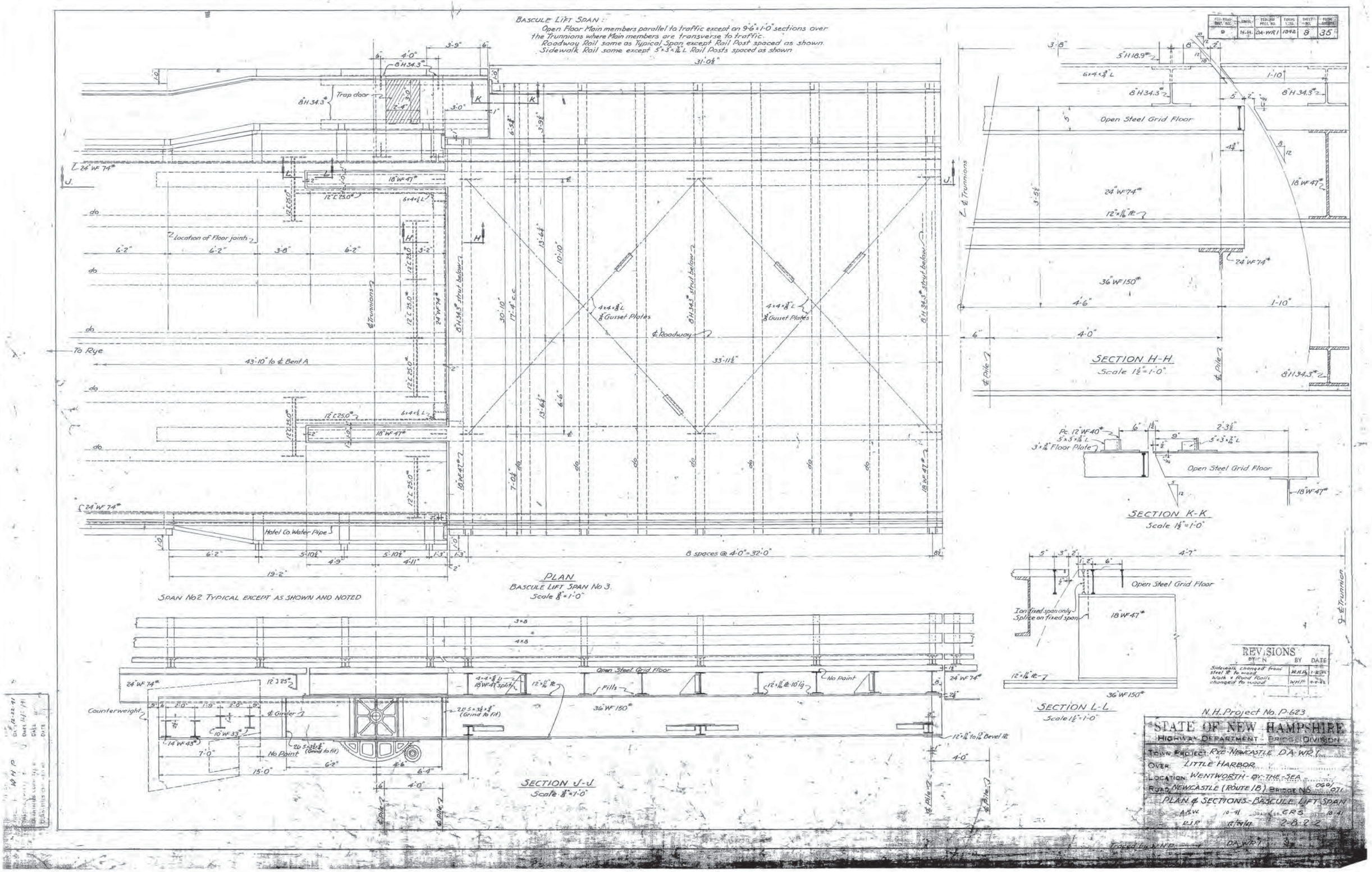

BASCULE LIFT SPAN:
Open Floor Main members parallel to traffic except on 9'-6" x 1'-0" sections over the Trunnions where Main members are transverse to traffic.
Roadway Rail same as Typical Span except Rail Post spaced as shown.
Sidewalk Rail same except 5" x 3" x 7/16" L Rail Posts spaced as shown
PLAN
BASCULE LIFT SPAN No 3.
Scale 3/8" = 1'-0"
SPAN No 2 TYPICAL EXCEPT AS SHOWN AND NOTED
SECTION H-H
Scale 1 1/2" = 1'-0"
SECTION K-K
Scale 1 1/2" = 1'-0"
SECTION L-L
Scale 1 1/2" = 1'-0"
SECTION J-J
Scale 3/8" = 1'-0"
Open Steel Grid Floor
Trap door
Location of Floor joints
To Rye
43'-10" to ℄ Bent A
33'-11 1/2"
8 spaces @ 4'-0" = 32'-0"
Hotel Co. Water Pipe
Counterweight
℄ Girder
No Point
Fills
℄ Roadway
℄ Trunnions
℄ Pile
℄ Trunnion
REVISIONS
STATE OF NEW HAMPSHIRE
HIGHWAY DEPARTMENT - BRIDGE DIVISION
TOWN PROJECT RYE-NEWCASTLE DA-WR 1
OVER LITTLE HARBOR
LOCATION WENTWORTH-BY-THE-SEA
ROAD NEWCASTLE (ROUTE 1B) BRIDGE No 060/071
PLAN & SECTIONS - BASCULE LIFT SPAN
N.H. Project No. P-623

FED. ROAD DIST. NO.	STATE	PROJ. NO.	FISCAL YEAR	SHEET NO.	TOTAL SHEETS
9	N. H.	DA-WR1	1942	10	35

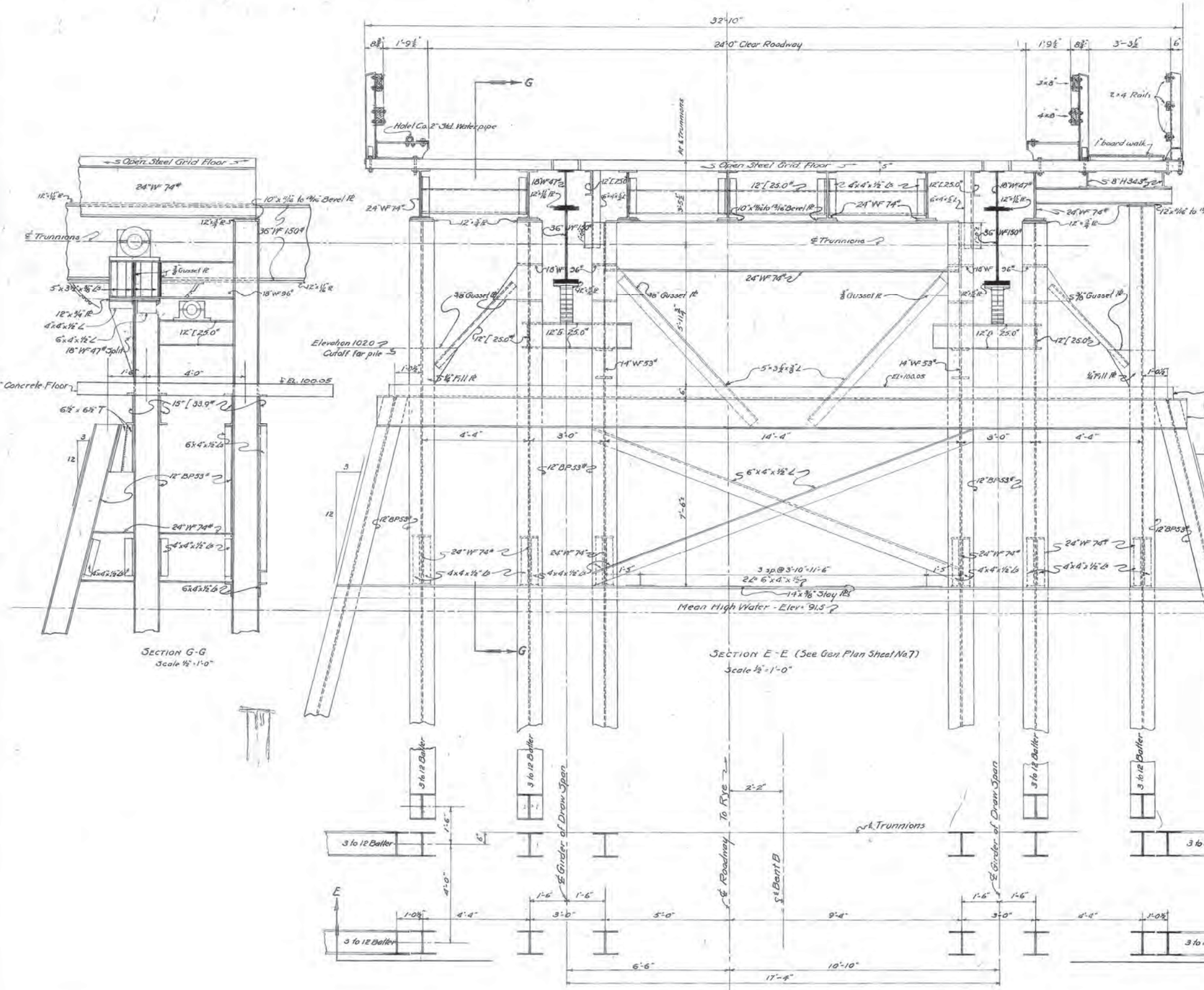

ESTIMATE OF QUANTITIES

ITEM	DESCRIPTION	UNIT	QUANTITY
8.3	Unclassified Structure Excav.	Cu.Yd	60
8.4	Coffer Dam	Unit	1
31	Removing Superstructure	Unit	1
32.1	Concrete Class A	Cu.Yd.	172
35	Reinforcing Steel	Lb.	13,170
36.1	Structural Steel	Lb.	230,530
36.3	Steel Grid Floor	Sq.Ft.	7,762
43.3	Steel Bearing Piles	Lb.	133,200
44-A	Bridge Railing D_1 (Sidewalk)	Lin.Ft.	251
79	Maintenance of Traffic	Lin.Ft	253
303	Machinery for operating Lift Span	Unit	1
37	Structural Timber (treated)	M.B.M.	1.100
44-B	Bridge Railing D_2 (Roadway)	Lin.Ft.	502

REVISIONS		
	BY	DATE
Changed Pipe Piles No 12 Ft W.P.T. to round Tip Type		11-14-41
Lengthened Bracket under Trunnions		11-12-41
Changed Road Rail to wood		2-7-42

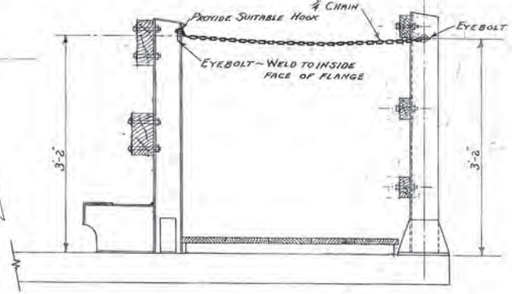

Sidewalk Safety Chain
Scale 1" = 1'-0"

N.H. Project R623

STATE OF NEW HAMPSHIRE
HIGHWAY DEPARTMENT - BRIDGE DIVISION

TOWN PROJECT: RYE-NEWCASTLE DA-WR1
OVER: LITTLE HARBOR
LOCATION: WENTWORTH BY THE SEA
ROAD: NEWCASTLE (ROUTE 1B) BRIDGE NO. 029/071
PLAN & SECTIONS - BENT B
DESIGNED BY A.N.W. DATE ..... DRAWN BY C.F.S. DATE 10/21/41
CHECKED BY R.J.P. DATE 12/29/41 FILE NO. 2-8-2-2

PLAN TRACED BY
TRACING CHECKED BY W.S.B.
PROFILE TRACED BY
CHECKED
DATE 12/29/41

BOOK NO. PAGE NO.
DATE STA. TO STA. DESCRIPTION

PROJ. NO.	SHEET NO.	TOTAL SHEETS
DA-WR1	10	35