STANDARD NO. TS-1B

REVISION DATE
7-13-01

*.DGN FILE NAME
TS-1B

METRIC STANDARD PLANS

STATE OF NEW HAMPSHIRE
DEPARTMENT OF TRANSPORTATION, CONCORD, N.H.

TRAFFIC SIGNAL MAST ARM FOUNDATION - TYPE 1B

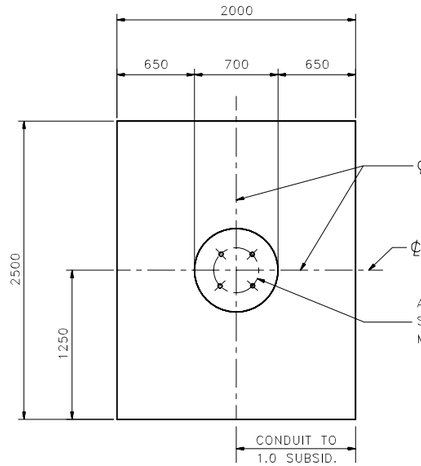

PLAN

TYPICAL QUANTITIES PER BASE		
ITEM NO.	DESCRIPTION	QUANTITY
520.21 *	CONCRETE CLASS B (FTGS)	3.5 m^3
544 *	REINFORCING STEEL	188 kg
206.1 *	COMMON STRUCTURE EXCAVATION	15 m^3

* ITEM NUMBERS SHOWN ARE FOR SPECIFICATION REFERENCE ONLY. NO SEPARATE PAYMENT WILL BE MADE FOR THESE ITEMS.

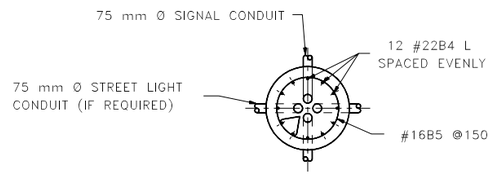

SECTION A - A

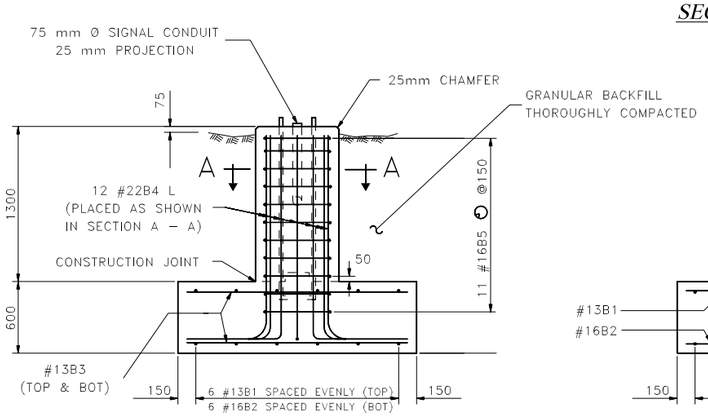

ELEVATION

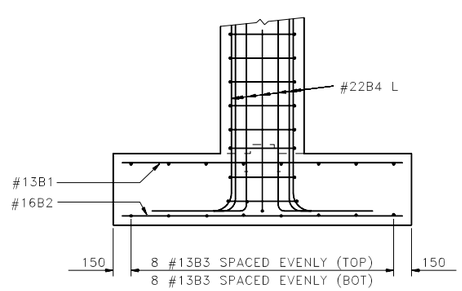

END ELEVATION

REINFORCING SCHEDULE				
MARK	SIZE	NO.	UNBENT LENGTH	TYPE
B1	#13	6	2350	—
B2	#16	6	2350	—
B3	#13	16	1850	—
B4	#22	12	2335	L
B5	#16	11	2150	↻

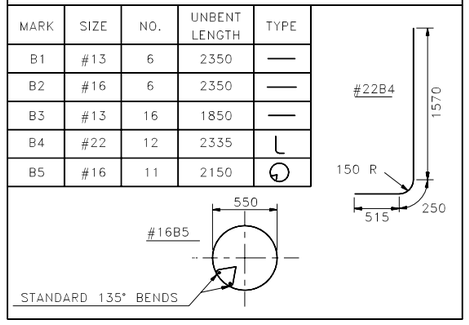

TRAFFIC SIGNAL MAST ARM FOUNDATION - TYPE 1C

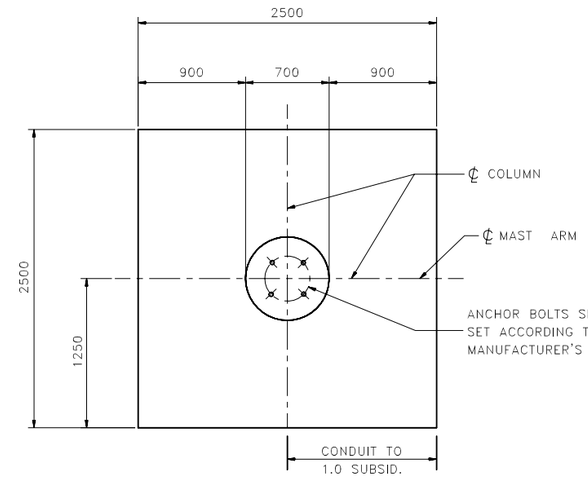

PLAN

TYPICAL QUANTITIES PER BASE		
ITEM NO.	DESCRIPTION	QUANTITY
520.21 *	CONCRETE CLASS B (FTGS)	4.3 m^3
544 *	REINFORCING STEEL	253 kg
206.1 *	COMMON STRUCTURE EXCAVATION	18 m^3

* ITEM NUMBERS SHOWN ARE FOR SPECIFICATION REFERENCE ONLY. NO SEPARATE PAYMENT WILL BE MADE FOR THESE ITEMS.

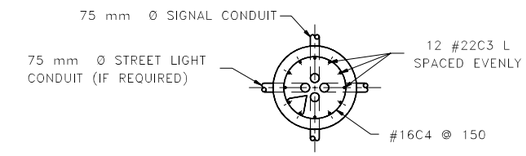

SECTION A - A

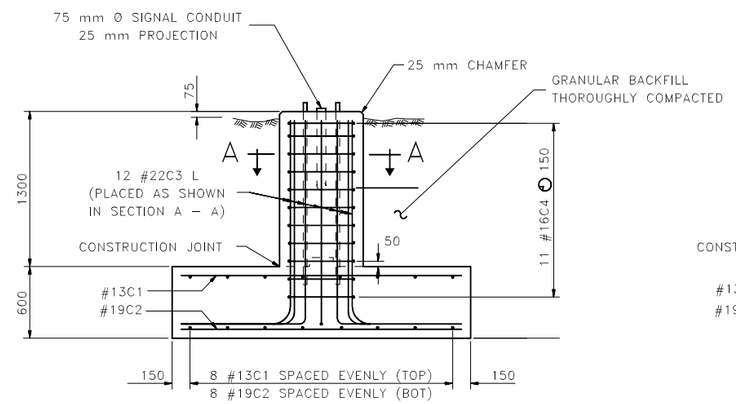

ELEVATION

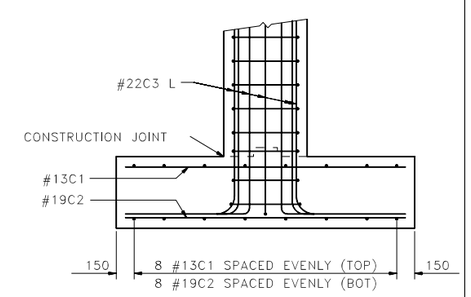

END ELEVATION

REINFORCING SCHEDULE				
MARK	SIZE	NO.	UNBENT LENGTH	TYPE
C1	#13	16	2350	—
C2	#19	16	2350	—
C3	#22	12	2575	L
C4	#16	11	2150	↻

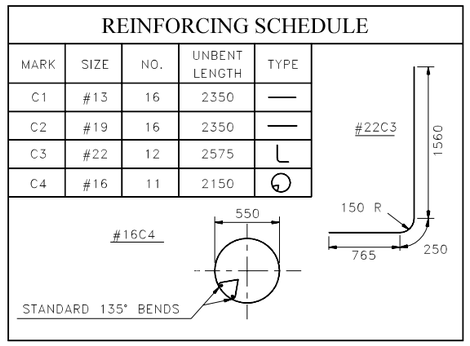

2 OF 2

ALL DIMENSIONS SHOWN ARE IN MILLIMETERS OR METERS. WHOLE NUMBERS INDICATE MILLIMETERS; DECIMAL NUMBERS INDICATE METERS UNLESS OTHERWISE NOTED.

TRAFFIC SIGNAL STANDARD

TRAFFIC SIGNAL MAST ARM FOUNDATIONS - TYPE 1B & 1C

STANDARD NO. TS-1B

REVISION DATE
7-13-01

*.DGN FILE NAME
TS-1B

METRIC STANDARD PLANS

STATE OF NEW HAMPSHIRE
DEPARTMENT OF TRANSPORTATION, CONCORD, N.H.

STANDARD NO. TS-1B