STANDARD NO. GR-3C

| REVISION DATE |
|---|
| 7-13-01 |

*.DGN FILE NAME
GR-3C

METRIC STANDARD PLANS

STATE OF NEW HAMPSHIRE
DEPARTMENT OF TRANSPORTATION, CONCORD, N.H.

STANDARD NO. GR-3C

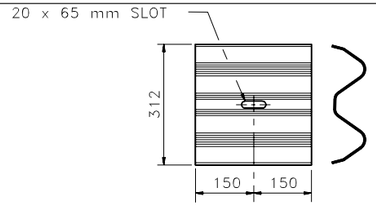


*W-BEAM BACK-UP PLATE*
(3 REQ'D)
[RWB01a]

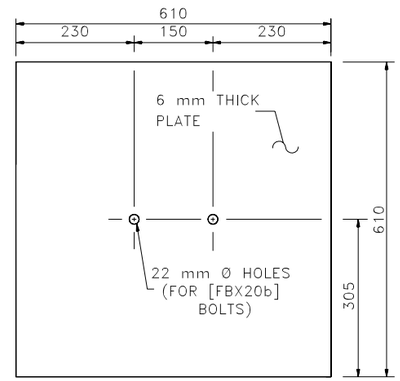


*SOIL PLATE*
(2 REQ'D–POSTS A)

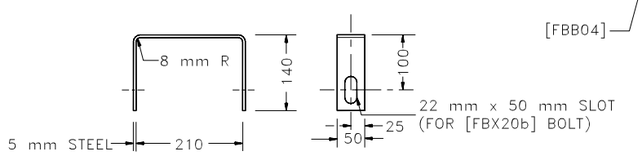


*YOKE*
(2 REQ'D)
[PFP01]

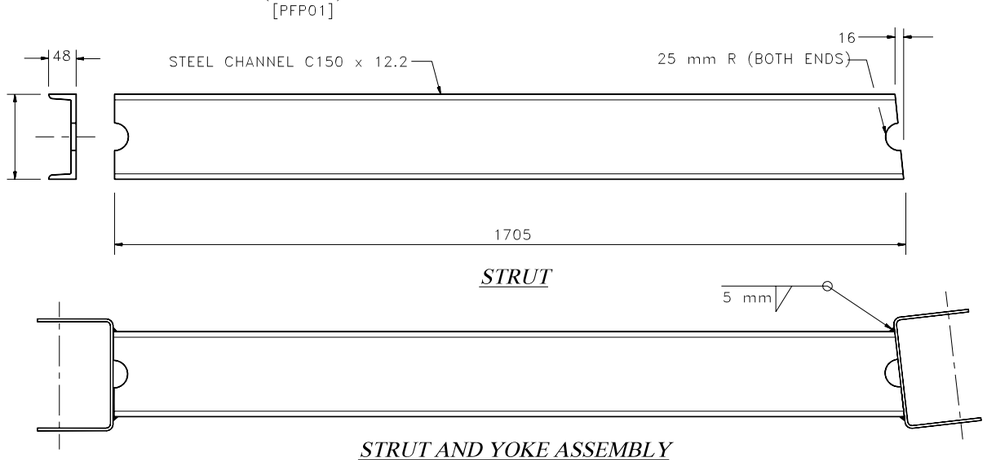


*STRUT*

*STRUT AND YOKE ASSEMBLY*
SHOWN LEGS UP. FOR OPPOSITE HAND, INSTALL LEGS DOWN.
[PFP01]

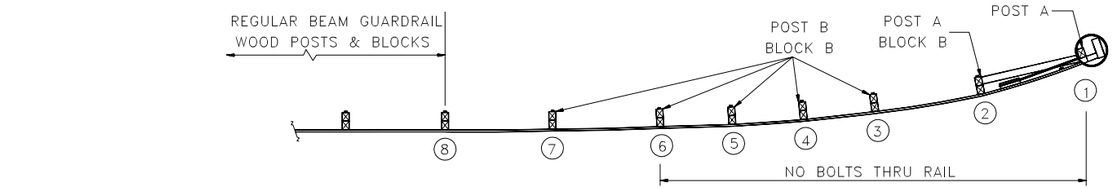


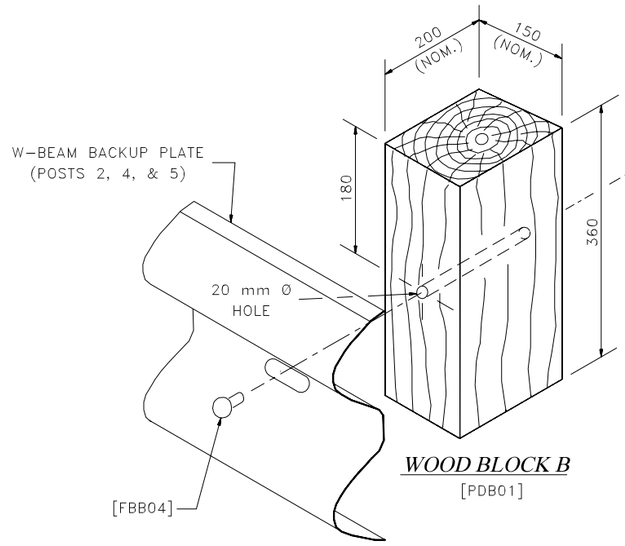


*WOOD BLOCK B*
[PDB01]

*POST BOLT ASSEMBLY, POSTS 2-7*

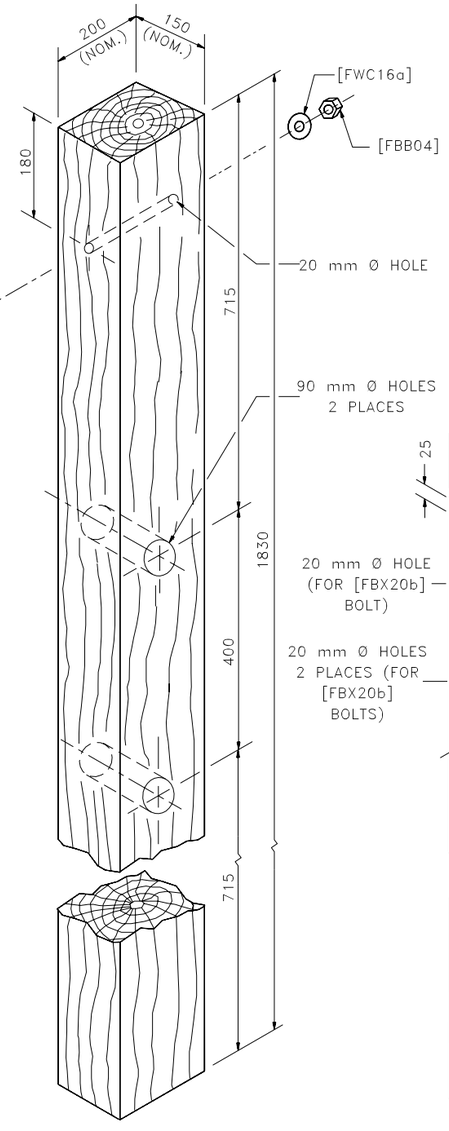


*CRT TIMBER*
*BREAKAWAY WOOD POST B*
[PDE09] MODIFIED (5 REQ'D)

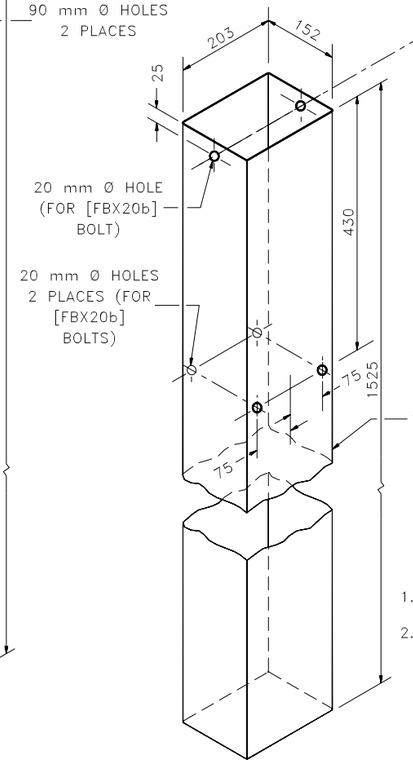


*FOUNDATION TUBE*
(2 REQ'D – POSTS A)
[PTE05]

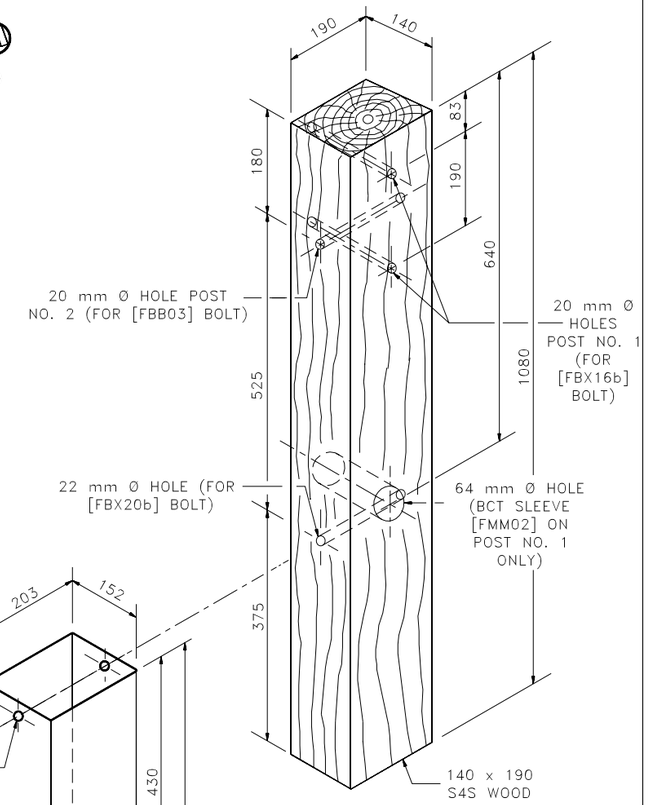


*BCT TIMBER*
*BREAKAWAY WOOD POST A*
NOTE: CORNERS OF POSTS MUST BE ROUNDED TO FIT FILLET IN STEEL TUBES – (2 REQUIRED) [PDF01]

*GENERAL NOTES*

1. ALL DIMENSIONS SUBJECT TO MANUFACTURER'S TOLERANCES.
2. DESIGNATIONS PROVIDED IN BRACKETS [ ] RELATE TO STANDARD ELEMENTS IN *A GUIDE TO STANDARDIZED HIGHWAY BARRIER HARDWARE*, 1995, AASHTO–AGC–ARTBA JOINT COOPERATIVE COMMITTEE.

ALL DIMENSIONS SHOWN ARE IN MILLIMETERS OR METERS. WHOLE NUMBERS INDICATE MILLIMETERS; DECIMAL NUMBERS INDICATE METERS UNLESS OTHERWISE NOTED.



GUARDRAIL STANDARD

*BEAM GUARDRAIL*
*TERMINAL UNIT TYPE ELT*
*HARDWARE DETAILS*

STANDARD NO. GR-3C

| REVISION DATE |
|---|
| 7-13-01 |

*.DGN FILE NAME
GR-3C

METRIC STANDARD PLANS

STATE OF NEW HAMPSHIRE
DEPARTMENT OF TRANSPORTATION, CONCORD, N.H.

STANDARD NO. GR-3C