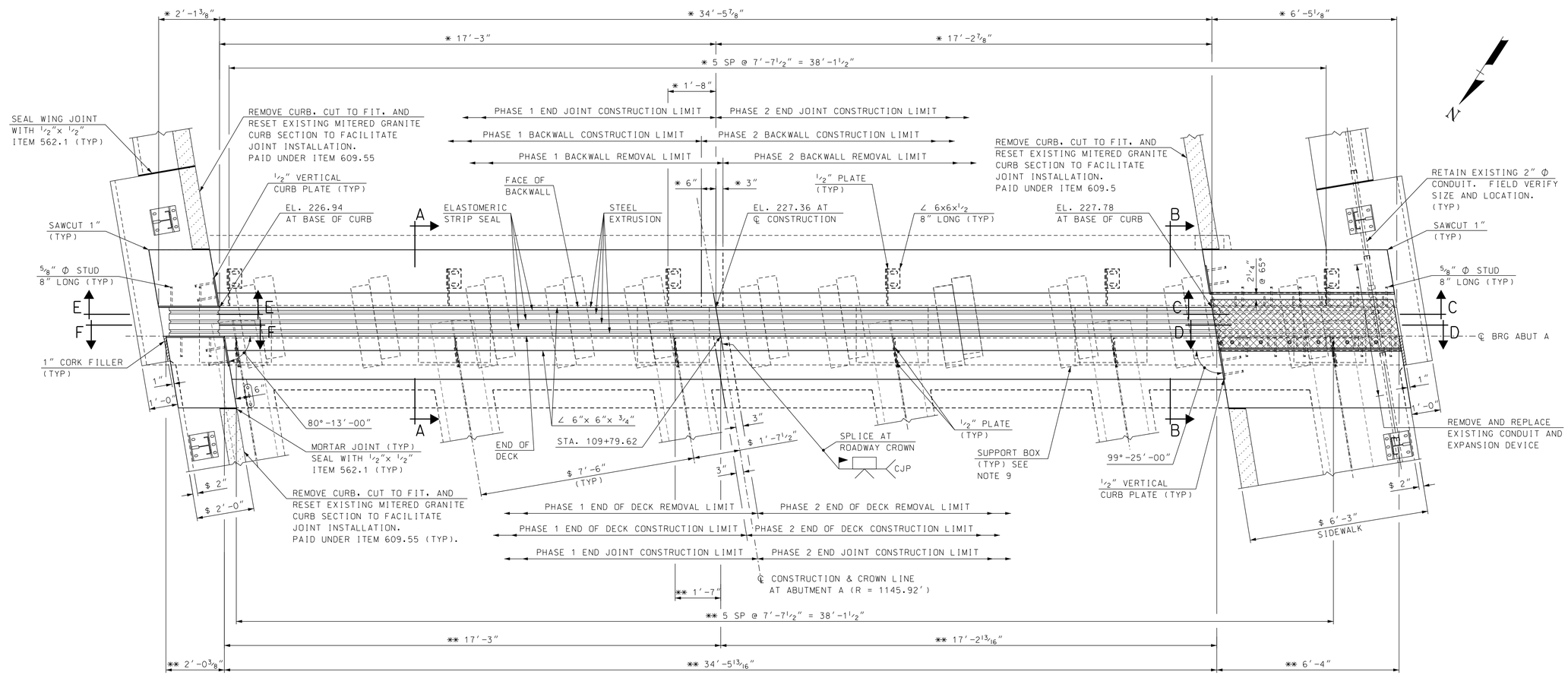

PLAN VIEW

SCALE: 1/2" = 1'-0"

$ RADIAL DIMENSION
* DIMENSION ALONG FACE OF BACKWALL
** DIMENSION ALONG END OF DECK

NOTE: DETAILS AND NOTES MAY NOT BE CURRENT. CLOSELY REVIEW BEFORE USING DETAILS.

EXPANSION JOINT NOTES

1. THE MODULAR JOINT SHOWN IS REPRESENTATIVE OF THE TYPE OF EXPANSION JOINT ACCEPTABLE FOR USE. THE EXACT JOINT CONFIGURATION WILL DEPEND UPON THE MANUFACTURER'S DETAILS. SHOP DRAWINGS OF MODULAR EXPANSION JOINT SYSTEM INCLUDING BARRIER/CURB DETAILS, PLACEMENT DETAILS, AND SHIPPING DEVICES SHALL BE SUBMITTED TO THE ENGINEER FOR APPROVAL. THE ENTIRE ASSEMBLY, INCLUDING ELASTOMERIC SEALS, SHALL BE PAID FOR AS ITEM 561.2001, PREFABRICATED MODULAR BRIDGE JOINT SYSTEM (F) (SEE SPECIAL PROVISION).
2. EXPANSION JOINT STEEL SHALL BE AASHTO M223 (ASTM A572) GRADE 50. THE MINOR STEEL PLATES AND EXTRUSIONS MAY CONFORM TO AASHTO M183 (ASTM A36). ALL STEEL SHALL BE GALVANIZED.
3. SPLICES FOR EXPANSION JOINT STEEL SHALL DEVELOP FULL STRENGTH.
4. ELASTOMERIC SEALS SHALL BE FURNISHED IN ONE CONTINUOUS LENGTH. NO SPLICES WILL BE ALLOWED.
5. THE EXPANSION JOINT MANUFACTURER SHALL INCLUDE A TEMPERATURE SETTING TABLE FOR THE EXPANSION JOINT LOCATION ON THE SHOP DRAWINGS.
6. MINIMUM INSTALLATION WIDTH "T" = 12" AT 65°F. ADJUSTMENT IN OPENING FOR A 15°F CHANGE IN TEMPERATURE = 3/8".
7. THE MODULAR BRIDGE JOINT SYSTEM SHALL HAVE A RANGE OF MOVEMENT OF 3.69". THE CONTRATOR SHALL USE MODULAR BRIDGE JOINT SYSTEM STM SERIES BY WATSON BOWMAN ACME OR D SERIES BY D.S. BROWN. THIS DESIGN INCLUDES MOVEMENT DUE TO TEMPERATURE, SKEW, AND MINIMUM INSTALLATION.
8. JOINT SUPPORT PLATES AND HARDWARE SHALL BE SHOP WELDED TO THE EXPANSION JOINT STEEL AND SHALL BE DETAILED TO ALLOW FOR ALL NECESSARY ADJUSTMENTS TO ACCOMMODATE ROADWAY CROSS SLOPE, GRADE, AND TEMPERATURE SETTINGS.
9. SUPPORT BOXES AND BARS SHALL BE DESIGNED BY THE MANUFACTURER. TYPE, SIZE, AND LOCATION SHALL BE DETERMINED BY THE MANUFACTURER.
10. STIFFENER PLATES, STUDS, AND ANCHORAGES MAY NEED TO SHIFTED FROM THE LAYOUT AS SHOWN ON THESE PLANS BASED ON THE MANUFACTURER'S DESIGN OF THE SUPPORT BOXES AND BARS.
11. PROTECT THE TOP OF THE EXPANSION JOINT DURING PLACEMENT OF CONCRETE AND BITUMINOUS PAVEMENT.
12. ELEVATIONS SHOWN AT THE TOP OF THE EXPANSION JOINT STEEL ARMOR ANGLES AND BEAMS ARE 1/8" LOWER THAN ADJACENT PROPOSED FINISHED ROADWAY GRADE.
13. NO "LOW PROFILE" STEEL EXTRUSIONS SHALL BE ALLOWED.
14. NO REINFORCING STEEL SHALL BE CUT TO CLEAR THE BRIDGE EXPANSION DEVICE WITHOUT PRIOR APPROVAL OF THE ENGINEER.
15. IMMEDIATELY AFTER THE JOINT HAS BEEN SECURED TO THE STRUCTURAL STEEL AND BACKWALL, REMOVE SHIPPING DEVICES AND GRIND SMOOTH ANY WELDS ON EXPOSED SURFACES. REPAIR ANY DAMAGE TO GALVANIZED SURFACES PER SECTION 550
16. SEE BRIDGE SHEETS 7 & 8 FOR SECTIONS A-A, B-B, C-C, D-D AND E-E.

SAMPLE PLAN

DATE: 9-2014

STATE OF NEW HAMPSHIRE
DEPARTMENT OF TRANSPORTATION * BUREAU OF BRIDGE DESIGN

TOWN HOOKSETT | BRIDGE NO. 080\148 | STATE PROJECT 28435

LOCATION MAIN STREET over B&M RR, MERRIMACK RIVER, & RIVERSIDE STREET

ABUTMENT A EXPANSION JOINT (1 OF 3)

REVISIONS AFTER PROPOSAL		BY	DATE		BY	DATE
	DESIGNED	JAT	12/13	CHECKED	SMG	8/14
	DRAWN	SMG	12/13	CHECKED	JAT	8/14
	QUANTITIES	SMG	9/14	CHECKED	JAT	9/14
	ISSUE DATE		FEDERAL PROJECT NO.		SHEET NO.	
	REV. DATE		----------		12A	

BRIDGE SHEET 8 OF 18
FILE NUMBER 126-1-1
TOTAL SHEETS 1

SUBDIRECTORY	.DGN LOCATOR	SHEET SCALE
BRC\	28435 Exp Jt A - Rev 1	AS NOTED

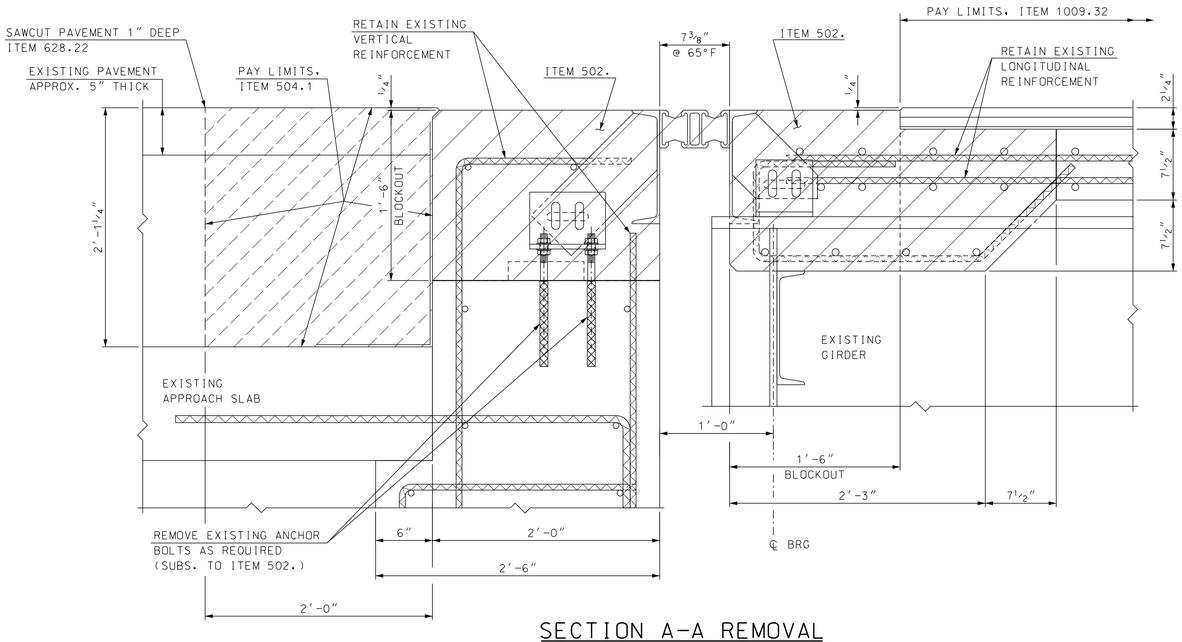

SECTION A-A REMOVAL

SCALE: 1 1/2" = 1'-0"

NOTE: DETAILS AND NOTES MAY NOT BE CURRENT. CLOSELY REVIEW BEFORE USING DETAILS.

TEMPERATURE ADJUSTMENT TABLE	
TEMPERATURE	"T"
20°F	13 1/8"
35°F	12 3/4"
50°F	12 3/8"
65°F	12"
80°F	11 5/8"
95°F	11 1/4"

TEMPERATURE ADJUSTMENT NOTES

1. "T" DIMENSIONS ARE PERPENDICULAR TO FACE OF BACKWALL.
2. MINIMUM "T" WIDTH FOR SEAL INSTALLATION = 12" (APPROXIMATELY 65°F OR LESS).
3. VALUES IN THE TEMPERATURE ADJUSTMENT TABLE ARE FOR SETTING THE EXPANSION JOINT ASSEMBLY IMMEDIATELY PRIOR TO POURING CONCRETE BLOCKOUTS.

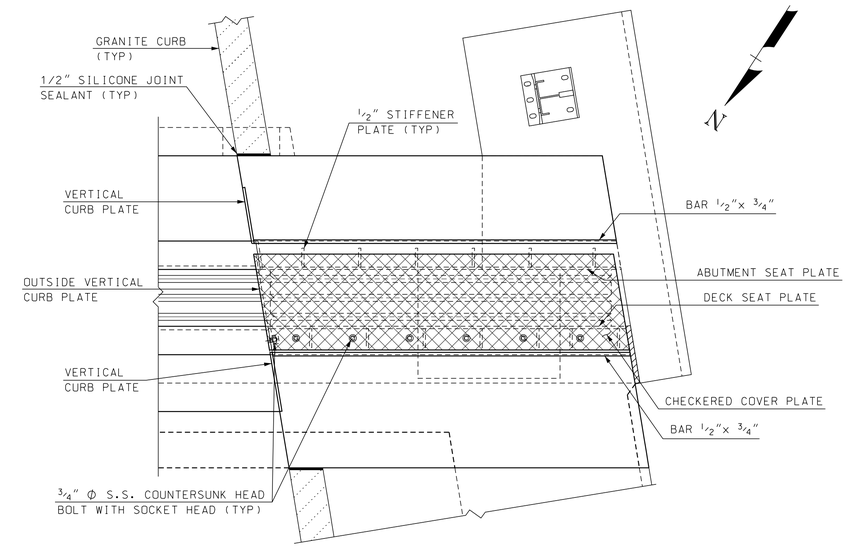

UPPER ASSEMBLY

SCALE: 3/4" = 1'-0"

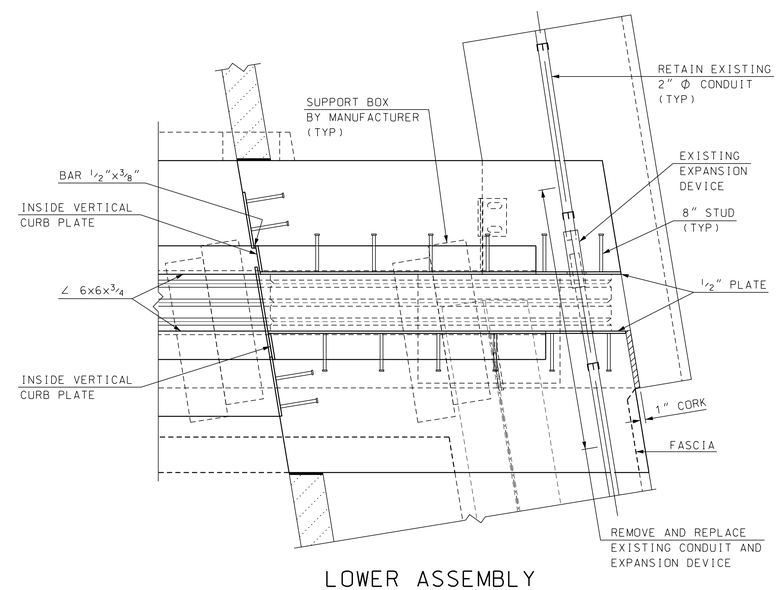

LOWER ASSEMBLY

SCALE: 3/4" = 1'-0"

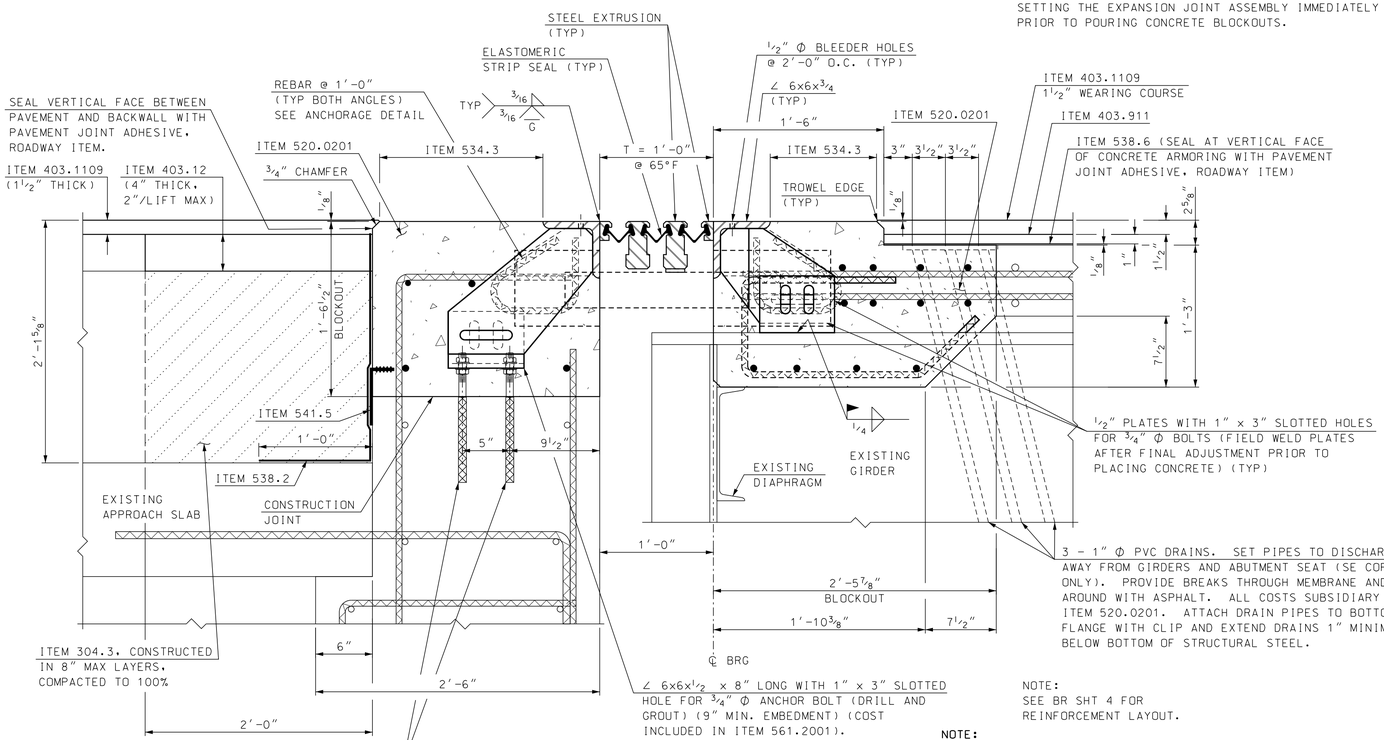

SECTION A-A CONSTRUCTION

SCALE: 1 1/2" = 1'-0"

NOTE:
SEE BR SHT 4 FOR
REINFORCEMENT LAYOUT.

NOTE:
ADJUST END OF DECK AND TEMPERATURE TABLE AS REQUIRED OR AS DIRECTED BY THE ENGINEER SO THAT THE END OF DECK ALWAYS COVERS THE EXISTING DIAPRAGM.

SAMPLE PLAN

DATE: 9-2014

SUBDIRECTORY	.DGN LOCATOR	SHEET SCALE
BRC\	28435 Exp Jt A - Rev 1	AS NOTED

STATE OF NEW HAMPSHIRE
DEPARTMENT OF TRANSPORTATION * BUREAU OF BRIDGE DESIGN

TOWN HOOKSETT BRIDGE NO. 080\148 STATE PROJECT 28435

LOCATION MAIN STREET over B&M RR, MERRIMACK RIVER, & RIVERSIDE STREET

ABUTMENT A EXPANSION JOINT (2 OF 3)

REVISIONS AFTER PROPOSAL	BY	DATE		BY	DATE
DESIGNED	JAT	12/13	CHECKED	SMG	8/14
DRAWN	SMG	12/13	CHECKED	JAT	8/14
QUANTITIES	SMG	9/14	CHECKED	JAT	9/14

ISSUE DATE	FEDERAL PROJECT NO.	SHEET NO.	TOTAL SHEETS
REV. DATE	----------	13A	1

BRIDGE SHEET 9 OF 18

FILE NUMBER 126-1-1

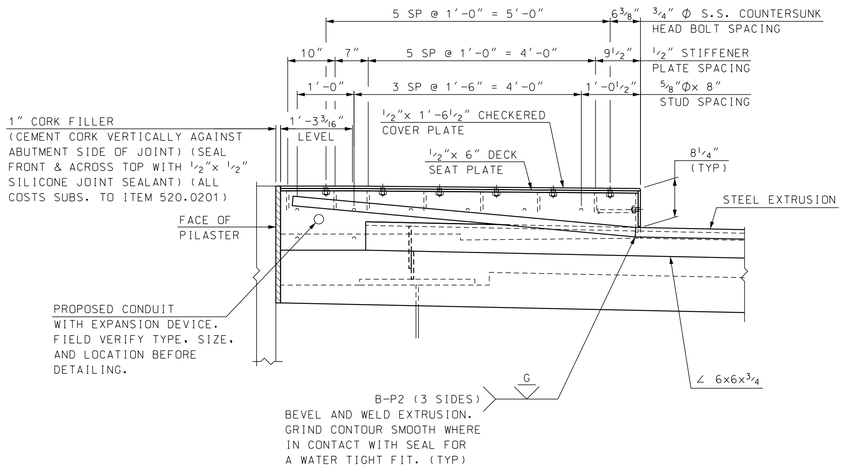

SECTION D-D

SCALE: 3/4" = 1'-0"

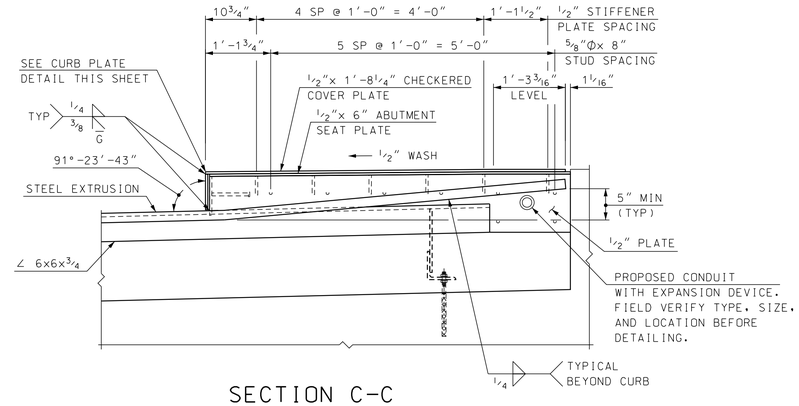

SECTION C-C

SCALE: 3/4" = 1'-0"

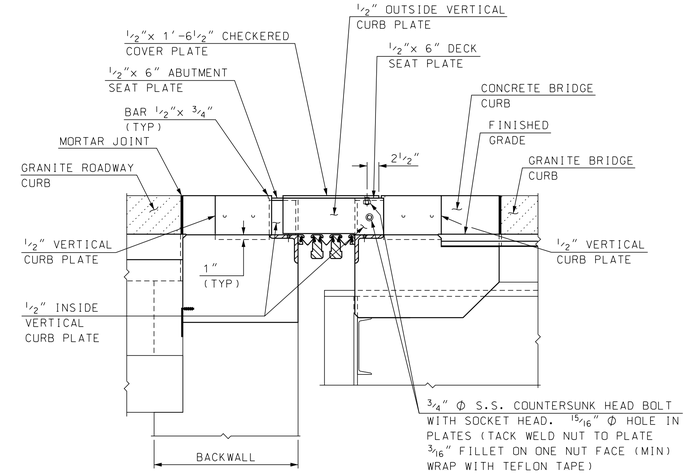

SECTION B-B

SCALE: 3/4" = 1'-0"

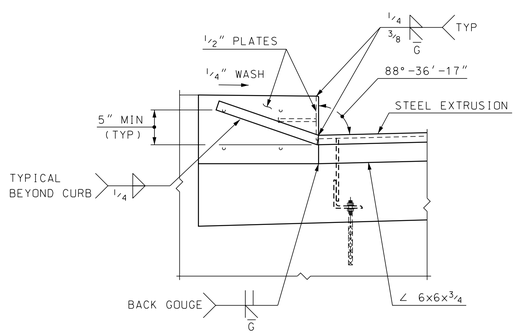

SECTION E-E

SCALE: 3/4" = 1'-0"

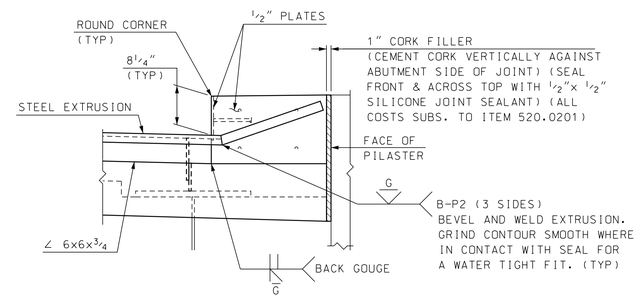

SECTION F-F

SCALE: 3/4" = 1'-0"

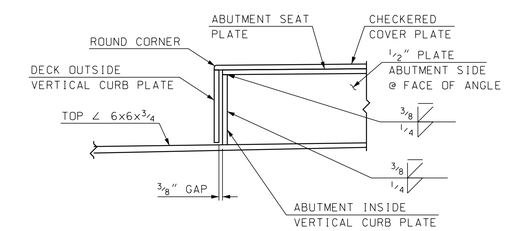

CURB PLATE DETAIL

SCALE: 1 1/2" = 1'-0"

NOTE: DETAILS AND NOTES MAY NOT BE CURRENT. CLOSELY REVIEW BEFORE USING DETAILS.

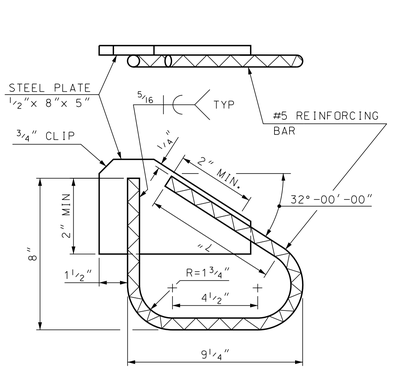

BACKWALL ANCHORAGE DETAIL

SCALE: 3" = 1'-0"

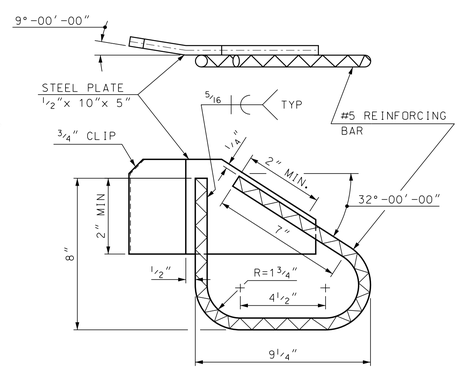

DECK SIDE ANCHORAGE DETAIL

SCALE: 3" = 1'-0"

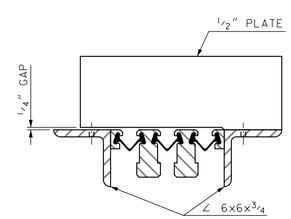

DECK OUTSIDE VERTICAL CURB PLATE DETAIL

SCALE: 1 1/2" = 1'-0"

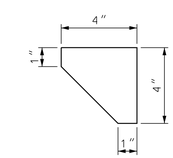

STIFFENER PLATE

SCALE: 3" = 1'-0"

SAMPLE PLAN

DATE: 9-2014

STATE OF NEW HAMPSHIRE
DEPARTMENT OF TRANSPORTATION * BUREAU OF BRIDGE DESIGN

TOWN HOOKSETT | BRIDGE NO. 080\148 | STATE PROJECT 28435

LOCATION MAIN STREET over B&M RR, MERRIMACK RIVER, & RIVERSIDE STREET

ABUTMENT A EXPANSION JOINT (3 OF 3)

BRIDGE SHEET 10 OF 18

REVISIONS AFTER PROPOSAL		BY	DATE		BY	DATE
	DESIGNED	JAT	12/13	CHECKED	SMG	8/14
	DRAWN	SMG	12/13	CHECKED	JAT	8/14
	QUANTITIES	SMG	9/14	CHECKED	JAT	9/14
	ISSUE DATE		FEDERAL PROJECT NO.		SHEET NO.	TOTAL SHEETS
	REV. DATE		----------		14A	1

FILE NUMBER 126-1-1

SUBDIRECTORY	.DGN LOCATOR	SHEET SCALE
BRC\	28435 Exp Jt A - Rev 1	AS NOTED